CASTLE Series

3C3 HD 20-80 kW

USER MANUAL

SANTAK

Thank you for choosing Santak products!

Please adhere to the warnings and instructions specified in the manual and on the equipment, and keep the manual properly for future reference. Do not try to operate the equipment before reading all the safety information and operation instructions

The manual applies to the 3C3 HD series, including:

3C3 HD-20K

3C3 HD-30K

3C3 HD-40K

3C3 HD-60K

3C3 HD-80K

IMPORTANT SAFETY INSTRUCTIONS

SAVE THESE INSTRUCTIONS

This manual contains important instructions that you should follow during installation and maintenance of the UPS and batteries. Please read all instructions before operating the equipment and save this manual for future reference.

WARNING

This is a product for commercial and industrial application for Level 2 environment. Installation restrictions or additional measures may be needed to prevent disturbances.

© 2022 Santak Corporation
All Rights Reserved

The contents of this manual are the copyright of the publisher and may not be reproduced (even extracts) without the written approval of Santak Corporation. Every care has been taken to ensure the accuracy of the information contained in this manual, but no liability can be accepted for any errors or omission. The right to make design modifications is reserved.

Table of Contents

Chapter 1 SAFETY INSTRUCTIONS vii
1.1. Certification 2
1.2. User Precautions 2
1.3. Conventions Used in this Manual 3
1.4. Environment 5
1.5. Getting Help 5

Chapter 2 INTRODUCTION 6
2.1. Internal structure of UPS system 9
2.2. Operation modes of the UPS 10
2.2.1. AC power online operation mode 10
2.2.2. Battery Mode 13
2.2.3. Bypass Mode 14
2.3. Features of the UPS 15
2.3.1. Advanced Battery Management(ABM) 15
2.3.2. HotSync wireless parallel technology (HotSync) 15
2.3.3. Software and communication features 15
2.3.4. User interface 15
2.3.5. Power supply management software 16
2.4. Battery system 16
2.5. Basic system configuration 16

Chapter 3 UPS INSTALLATION PLAN 17
3.1. Creating an Installation Plan 17
3.2. Site Preparations 18
3.2.1. Environmental and Installation precautions 18
3.2.2. Power supply and wiring preparation of the UPS system 23
3.2.3. Preparation for UPS interface wiring 28

Chapter 4 UPS SYSTEM INSTALLATION 29
4.1. Preliminary Installation Information 29
4.2. UPS Cabinet Inspection and Unpacking 29
4.3. System Installation 33
4.3.1. Mechanical installation 33
4.3.2. Cable installation 33
4.4. Installation of external battery cabinet 36
4.4.1. Supported battery configurations 37
4.5. Wiring of the UPS Parallel System 39
4.5.1. Overview of power cables 39
4.5.2. Control signal overview 41
4.5.3. Installation of the parallel control wiring 41

Copyright © 2025 Santak Corporation plc. All rights reserved.

Chapter 5 COMMUNICATION INTERFACES 43
5.1. Mini-slots 45
5.2. Intelligent Power Manager (IPM) Software 47
5.3. Signal input Monitoring 47

Chapter 6 UPS OPERATING INSTRUCTIONS 48
6.1. UPS Control Panel and Indicator Lamps 48
6.1.1. Control Panel 48
6.2. Use of LCD Control Panel 50
6.2.1. Status indicator lamps 50
6.2.2. System logs 50
6.2.3. Use of touch screen 51
6.2.4. Use menu 51
6.2.5. Meters 52
6.2.6. System Control Instructions 54
6.2.7. Use of Log menu 57
6.2.8. Use of Info. menu 59
6.2.9. Use of Setting menu 59
6.2.10. Use of service reminder function 65
6.3. System operation 68
6.3.1. Start the UPS in "Online" mode (default mode) 68
6.3.2. Start the UPS in “Bypass” mode 68
6.3.3. Switch from “Online” mode to “Bypass” mode 69
6.3.4. Switch from “Bypass” mode to “Online” mode 69
6.3.5. Switch from “Online” mode to “ECO” mode 70
6.3.6. Switch from “ECO” mode to “Online” mode 70
6.3.7. System shutdown 70
6.4. Single-UPS Operation 71
6.4.1. Single-UPS startup 71
6.4.2. UPS shutdown 72
6.5. Use of Remote Emergency Power Off (REPO) Switch 73
6.6. Transfer the UPS from Double Conversion Mode to Maintenance Bypass Mode 74
6.7. Switch from “Maintenance Bypass” Mode to “Online” Mode 75

Chapter 7 UPS MAINTENANCE 76
7.1. Important Safety Instructions 76
7.2. Carry out Preventive Maintenance 77
7.2.1. Daily Maintenance 77
7.2.2. Monthly maintenance 77
7.2.3. Regular maintenance 79
7.2.4. Annual maintenance 79
7.2.5. Battery maintenance 79
7.3. Installation of Battery 79
7.4. Maintenance Training 80

Copyright © 2025 Santak Corporation plc. All rights reserved.

Chapter 8 Technical Indicators of Product 81
8.1. Models 81
8.2. Technical Indicators 81
8.2.1. Standard 81
8.2.2. UPS input 82
8.2.3. UPS output 82
8.2.4. Battery specifications 83
8.2.5. Environment 83

Chapter 9 WARRANTY 85

Chapter 10 INSTALLATION CHECKLIST 86

Copyright © 2025 Santak Corporation plc. All rights reserved.

List of Figures

Figure 2-1: 3C3 HD UPS 6
Figure 2-2: Structure of 20-40k product 7
Figure 2-3: Structure of 60-80k product 8
Figure 2-4: 3C3 HD UPS Wiring Diagram 9
Figure 2-5: Route of the electric energy running through the UPS in Online mode 11
Figure 2-6: Route of the electric energy running through the UPS in ECO mode 12
Figure 2-7: Route of the electric energy running through the UPS in battery mode 13
Figure 2-8: Route of the electric energy running through the UPS in bypass mode 14
Figure 3-1: Clearance for the UPS cabinet 20
Figure 3-2: UPS dimensions (20–40k) 21
Figure 3-3: UPS dimensions (60–80k) 22
Figure 4-1: 20–40k unpacking diagram 31
Figure 4-2: 60–80k unpacking diagram 32
Figure 4-3: Gland Plate and Connector Locations 34
Figure 4-4: Locations of cover plate and connecting terminals (60–80k) 35
Figure 4-5: Schematic diagram of the parallel UPS system 39
Figure 4-6: Simplified wiring of CAN and Pull-Chain of the parallel UPS system 40
Figure 5-1: Communication Interfaces 41
Figure 5-2: Gigabit Network Card 43
Figure 5-3: Second-generation Environmental Monitoring Probe 43
Figure 5-4: Industrial Gateway Card 44
Figure 5-5: Standard AS400/RS232 card 44
Figure 6-1: UPS Controls and Indicators 47
Figure 6-2: Components of the touch screen (Home interface) 49
Figure 6-3: Menu interface 50
Figure 6-4: Input interface 51
Figure 6-5: Output interface 51
Figure 6-6: Bypass interface 51
Figure 6-7: Battery interface 52
Figure 6-8: Password verification interface 52
Figure 6-9: System interface 53
Figure 6-10: Switch to bypass interface 53
Figure 6-11: Confirmation interface 54
Figure 6-12: UPS interface 54
Figure 6-13: UPM interface 55
Figure 6-14: UPM shutdown interface 55
Figure 6-15: Active Log interface 56
Figure 6-16: History Log interface 56
Figure 6-17: Clear Log interface 56
Figure 6-18: Info. interface 1 57
Figure 6-19: Info. interface 2 57
Figure 6-20: Password verification setting interface 58
Figure 6-21: Setting interface 58

Copyright © 2025 Santak Corporation plc. All rights reserved.

Figure 6-22: Setting - General interface 59
Figure 6-23: Setting - General - Time interface 59
Figure 6-24: Setting - Output interface 60
Figure 6-25: Setting - Meters interface 60
Figure 6-26: Setting - Password interface 60
Figure 6-27: Control password modification interface 61
Figure 6-28: Control password modification interface 61
Figure 6-29: Control password modification interface 62
Figure 6-30: Control password modification interface 62
Figure 6-31: Setting password modification interface 63
Figure 6-32: Service maintenance reminder interface 63
Figure 6-33: Service maintenance reminder setting interface 64
Figure 6-34: Location of service reminder function 64
Figure 6-35: Service reminder settings page 65
Figure 6-36: Fan replacement reminder settings 65
Figure 6-37: Switch status in online mode 72
Figure 6-38: Switch status in maintenance bypass mode 72
Figure 6-39: Switch status in Maintenance Bypass Mode 73
Figure 6-40: Switch status in online mode 73
Figure 7-1: Location of 20–40k air filter screen 76
Figure 7-2: Location of 60–80k air filter screen 76

Copyright © 2025 Santak Corporation plc. All rights reserved.

List of Tables

Table 1-1: Acronyms and Abbreviations 4
Table 2-1: Standards and optional UPS accessories: 16
Table 3-1: Dimensions and Weights 19
Table 3-2: Space reservation for the UPS cabinet 20
Table 3-3: Requirements on rated input/output and external wiring of the UPS (unit:mm^2) 24
Table 3-4: Requirements on 20K connecting terminals and torque 25
Table 3-5: Requirements on 30–40K connecting terminals and torques 26
Table 3-6: Requirements on 60–80K connecting terminals and torques 27
Table 6-1: Status indicator lamps 50
Table 6-2: Options displayed on the menu 52
Table 6-3: Menu of Meters functions 52
Table 6-4: Structure of Control menu 54
Table 6-5: Structure of Log menu 57
Table 6-6: Structure of Setting menu 60
Table 8-1: Gas concentrations recommended in Table B1 of ANSI/ISA-71.04-2013 for G1 equipment environment 84
Table 8-2: Requirements on the environment for transportation and storage within 1 year 84
Table 10-1: User Settings 88
Table 10-2: Configuration Settings 88

Copyright © 2025 Santak Corporation plc. All rights reserved.

Chapter 1 SAFETY INSTRUCTIONS

IMPORTANT SAFETY INSTRUCTIONS
SAVE THESE INSTRUCTIONS

This manual contains important instructions that should be followed during installation and maintenance of the UPS and batteries. Please read all instructions before operating the equipment and save this manual for future reference. The UPS operates with mains, battery or bypass power. It contains components that carry high currents and voltages. The properly installed enclosure is earthed and IP20 rated against electrical shock and foreign objects. However, the UPS is a sophisticated power system and only qualified personnel is allowed to install and service the UPS.

WARNING

- **This UPS contains LETHAL VOLTAGES. All repairs and service should be performed by AUTHORIZED SERVICE PERSONNEL ONLY. There are NO USER SERVICEABLE PARTS inside the UPS.**

WARNING

- **It must be grounded before power-on and operation.**
- **The output end might carry hazardous voltage even if the UPS is disconnected from AC power source.**
- **The terminal block accessible to user may also carry hazardous voltage even if the UPS is shut down. It's advisable to wait for the full discharge of the capacitor in 5 minutes, and not to approach the terminal block unless it's tested with a multimeter.**
- **To avoid fire or electric shock, it's advisable to mount the UPS in an indoor environment with a controllable temperature and humidity, and ensure that it is free of conductive impurities, and that the ambient temperature is not higher than 40°C (94°F). It's forbidden to operate the UPS near water or in any humid places (maximum humidity allowed: 95%). This system is not suitable for outdoor use.**
- **Connection with loads may also cause large leakage currents, and grounding must be done before power-on and product operation. When the UPS is running with load, never try to confirm its operating status via any operation, including disconnecting the earth wire.**
- **Make sure to disconnect it from all power supplies before installation or maintenance.**
- **In a parallel system, the output end might carry hazardous voltage even if the UPS is disconnected from AC power source.**
- **Batteries may cause electric shock or burning due to large short-circuit current, and the following precautions shall be taken: 1) Remove any watch, ring, or other metal objects; 2) Use tools with an insulated handle; 3) Do not place tools or metal parts on top of batteries; 4) Wear a rubber jacket and a pair of rubber boots.**
- **Electrical energy is dangerous. Do not attempt to alter any battery wiring or other connecting wiring, as this may result in injury.**
- **Do not open or disassemble the batteries. The released electrolyte may be toxic, which may harm the skin and eyes.**
- **Important: If there are more than one batteries connected in parallel, the UPS must be disconnected from all batteries before installation.**
- **The UPS can only be installed on concrete or nonflammable surface.**

Copyright © 2025 Santak Corporation plc. All rights reserved.

CAUTION

- **Installation or servicing should be performed by qualified service personnel knowledgeable of batteries and required precautions. Keep unauthorized personnel away from batteries. Consider all warnings, cautions, and notes before installing or replacing batteries. DO NOT DISCONNECT the batteries while the UPS is in Battery Mode.**
- **Please read the installation instructions before connecting to the power source.**
- **Check whether any battery is accidentally grounded. If any, remove the grounded power supply. An electric shock may be caused by touching any part of a grounded battery.**
- **For battery replacement, use batteries of the same type and specifications as those originally used in the UPS system.**
- **Disconnect the charging power supply before connecting or disconnecting terminals.**
- **Dispose of used batteries properly. Refer to the local disposal regulations.**
- **Do not throw the battery into a fire, as it may explode.**
- **Keep the UPS door closed to maintain appropriate cooling air flow. This can also protect the operators from being injured by hazardous voltage inside the equipment.**
- **Never operate the UPS system near any source of gas or electrical heat.**
- **Keep the operating environment within the parameters specified in this manual.**
- **Follow all “Danger”, “Attention” and “Instructions” warnings affixed to the inside and outside of the equipment.**

CAUTION

To prevent damage to the wiring channel and wiring in the UPS cabinet base when lifting or moving the cabinet:

- **Use only the left or right forklift slot to lift and move a packed cabinet.**
- **Make sure that the forklift fork is inserted into the forklift slot at the horizontal position. Do not tilt the fork upwards.**
- **Insert the forks all the way through the base.**

Damage to the wiring channels and wiring may be caused by failure to comply with these instructions.

Copyright © 2025 Santak Corporation plc. All rights reserved.

1.1. Certification

The product has the CE marking in compliance with the following European directives:

• LV Directive (Safety) 2014/35/EU

• EMC Directive 2014/30/EU

Declaration of conformity with UPS harmonised standards and directives EN 62040-1 (Safety) and EN 62040-2 (EMC) are available by contacting your nearest Santak office or authorized partner.

1.2. User Precautions

The only user operations permitted are:

- UPS startup and shutdown, excluding commissioning startup.
- Use of LCD control panel.

Users must follow the preventive measures, and can carry out the above operations only. Any violation of the instructions may result in dangers or accidental damage load.

CAUTION

- **Users are not allowed to remove any screws, other than those on the connecting plates and MBS locking panel. Prevent electrical hazards.**
- **If the product is used in a C2 environment, additional measures shall be taken to further suppress electromagnetic interference. This product is intended for commercial and industrial application in a C3 environment.**

Copyright © 2025 Santak Corporation plc. All rights reserved.

1.3. Conventions Used in this Manual

The intended audience of this manual are people who plan the installation, install, and use the UPS and UPS Module. This manual provides guidelines for checking the delivery, installing, and operating of the UPS.

The reader is expected to know the fundamentals of electricity, wiring, electrical components and electrical schematic symbols. This manual is written for a global reader.

NOTE

Read the manual before operating or working on the UPS.

The following are examples of symbols used on the UPS or accessories to alert you to important information:

Bold type	**Bold Type -**highlights important concepts in discussions, key terms in procedures, and menu options, or represents a command or option that you type or enter at a prompt.
	RISK OF ELECTRIC SHOCK - Indicates that a risk of electric shock is present and the associated warning should be observed.
	CAUTION: REFER TO OPERATOR'S MANUAL - Refer to your operator's manual for additional information, such as important operating and maintenance instructions.
	Information notes call attention to important features or instructions.
Pb	This symbol indicates that you should not discard the UPS or the UPS batteries in the trash. This product involves sealed, lead-acid batteries and must be disposed of properly. For more information, contact your local recycling/reuse or hazardous waste center.
	This symbol indicates that you should not discard waste electrical or electronic equipment (WEEE) in the trash. For proper disposal, contact your local recycling/reuse or hazardous waste center.

Copyright © 2025 Santak Corporation plc. All rights reserved.

The symbols and terms provided in the table below might be used in this manual. Please identify and understand them correctly.

Table 1-1: Acronyms and Abbreviations

Terminology	Description
UPS	Uninterruptible Power System
UPS system	The entire power protection system – the UPS cabinet, the battery cabinet, and options or accessories installed.
STS	Static transfer switch
CM	Communication module
HMI	Human Machine Interface
Mini-Slot	MINI communication card
EPO switch	Emergency Power Off switch
MBS	Maintenance Bypass Switch
REPO	Remote Emergency Power Off
ABM	Advanced Battery Management
HotSync	HotSync wireless parallel technology
ECO	Economic mode
K1	Input relay
K2	Battery relay
K3	Inverter relay
TB	Terminal block
VRLA	Valve-regulated lead-acid

Copyright © 2025 Santak Corporation plc. All rights reserved.

1.4. Environment

As per the recommendations in this manual, please install your UPS in a clean and stable environment free of vibration, dust, high humidity, flammable gas, and flammable liquid or caustic substance. Please refer to Section *3.2.1* for further environmental requirements.

WARNING

Hydrogen and oxygen shall be released into surrounding air during battery charging, float charging, deep discharging and overcharging. If hydrogen gas content is more than 4% in the air, an explosive gas mixture will be formed. Make sure the UPS is placed in a location that has enough air flow.

1.5. Getting Help

For any question about the UPS and the battery cabinet, please inquiry with your local offices and dealers. The equipment model and serial number shall be required. For the help with one of the following aspects, please call the customer service staff:

- Scheduling initial startup.
- Obtaining information about regional service locations and their numbers.
- For questions about anything in this manual.
- For issues not covered in this manual.

Copyright © 2025 Santak Corporation plc. All rights reserved.

Chapter 2 INTRODUCTION

Santak 3C3 HD UPS series uninterruptible power supply (UPS) is a true online, continuous-duty, transformerless, double-conversion, that supplies conditioned and uninterruptible AC power to critical load and protects it from power failures.

Santak 3C3 HD 20-80kW UPS has flexible power scalability from 20 kW to 320 kW, high flexibility and applicability, market leading efficiency, availability and performance, small-middle-large data center, automation, medical etc. to protect power and customized power system solution.

Please see Section *8.1*.for the product model.

NOTE

Startup and operational checks must be performed by an authorized Santak Customer Service Engineer, or the warranty terms specified in *Chapter 9* become void. This service is offered as part of the sales contract for the UPS. Contact service in advance (usually a two-week notice is required) to reserve a preferred startup date.

Figure 2-1: 3C3 HD UPS

Copyright © 2025 Santak Corporation plc. All rights reserved.

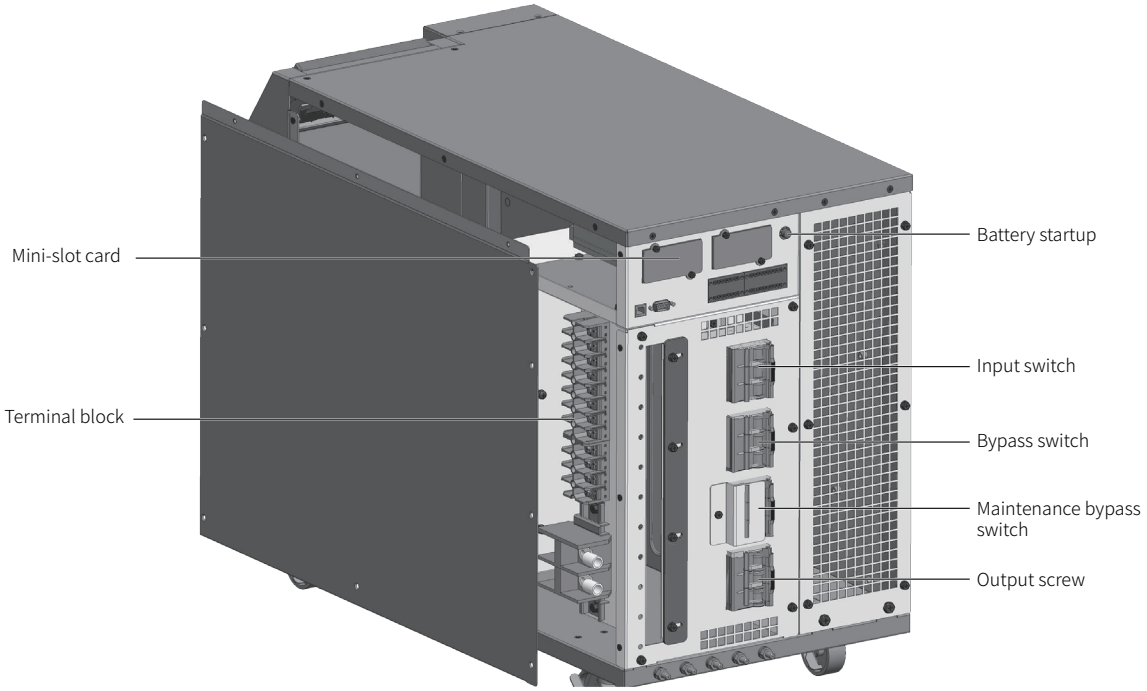

Figure 2-2: Structure of 20-40k product

Copyright © 2025 Santak Corporation plc. All rights reserved.

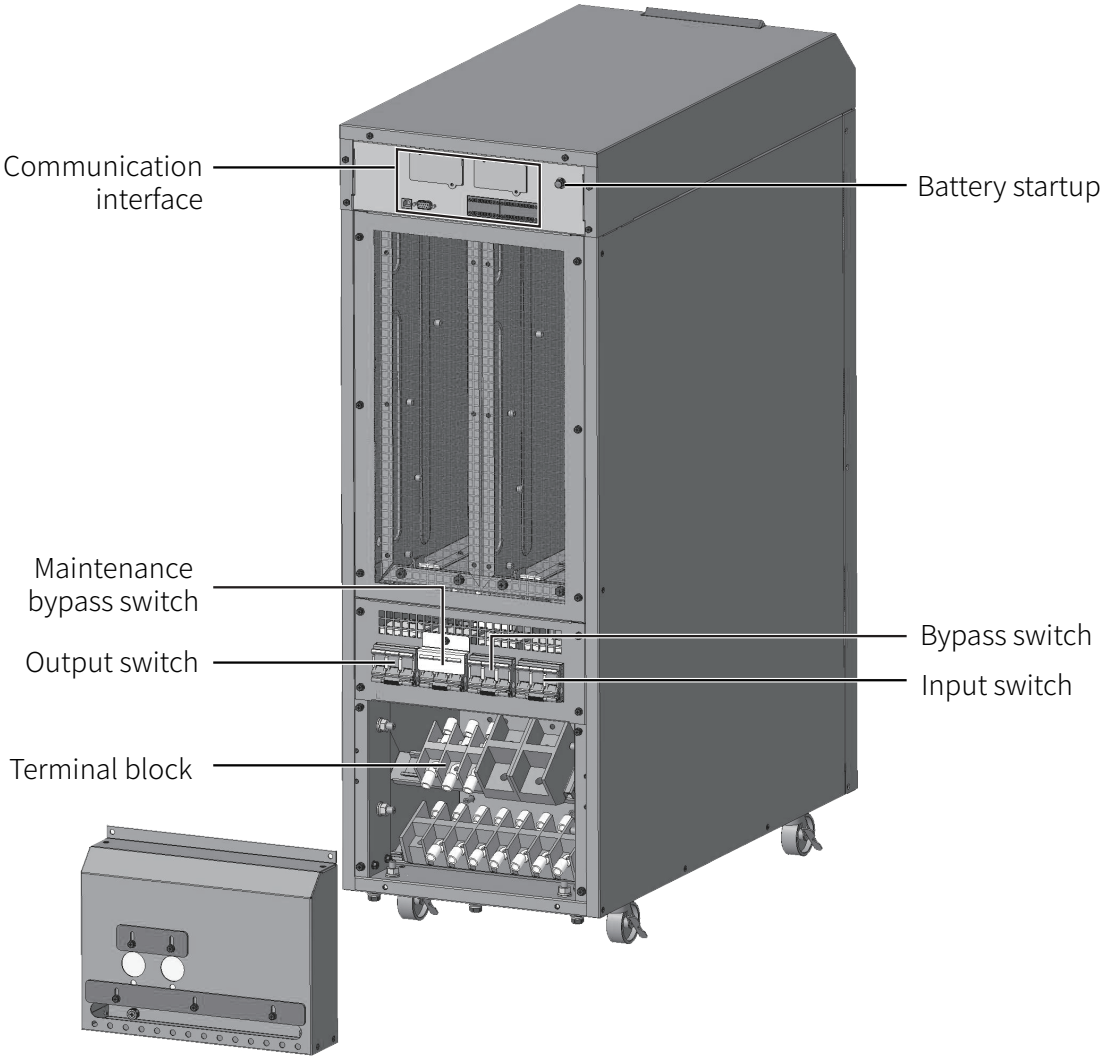

Figure 2-3: Structure of 60-80k product

Copyright © 2025 Santak Corporation plc. All rights reserved.

2.1. Internal structure of UPS system

The 3C3 HD UPS is comprised of power module, one input switch, one bypass switch, one output switch and one internal MBS. The UPS contains no internal battery.

Please see *Figure 2-4*.for the structure of the UPS cabinet.

The power module includes rectifier, battery converter, inverter, and static bypass.

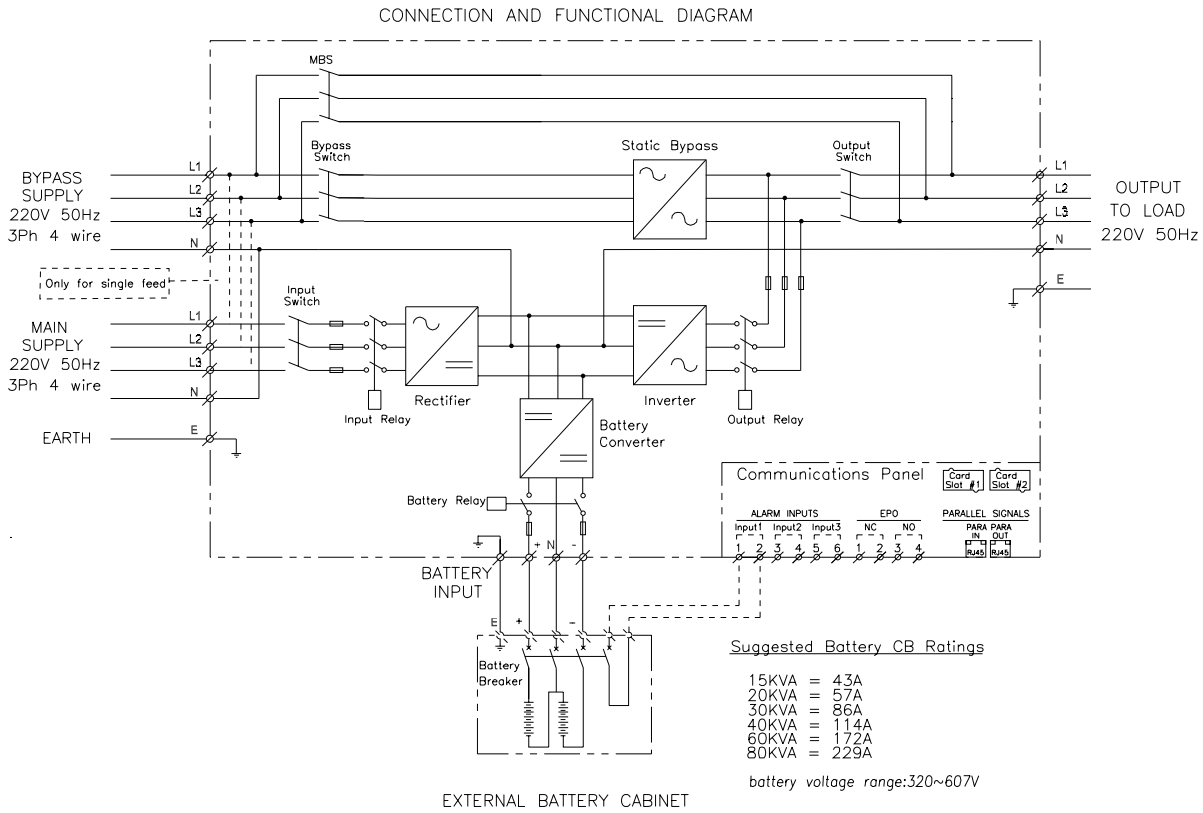

Figure 2-4: 3C3 HD UPS Wiring Diagram

If AC power supply is interrupted or exceeds the technical parameters provided in *Chapter 8*, the UPS will use the standby battery to supply power to the load. The power supply from the battery will endure a specified time or until the AC power supply recovers. In the case of long-time interruption of power supply, the UPS will allow switching to another power system (e.g., generator) or shut down the loads in sequence.

Copyright © 2025 Santak Corporation plc. All rights reserved.

2.2. Operation modes of the UPS

UPS operating modes:

- Online operation mode:
  - Online mode:The load is powered by the mains AC power through rectification and inversion. In this mode, the battery charger will work when necessary.
  - ECO mode: The mains supplies power to the load through the static bypass. When any abnormal situation of the mains is detected, the system usually transfers to the online mode in less than 2ms. When operating on ECO mode, the surge suppression module in the system can protect the load. The efficiency up to 99% when UPS running on ECO mode, which can significantly reduce energy loss without reducing system reliability.
- Battery mode:The backup DC power supply provides power and is converted to AC power by the inverter of the UPS. VRLA batteries are the most commonly used backup power source in this mode, which is called battery mode of operation.
- Bypass mode: AC power is directly supplied to the load through the static switch of the UPS.

2.2.1. AC power online operation mode

In this mode, AC power is supplied to the system. When “Online Mode” is shown on the front panel display, the input AC power is within the acceptable voltage and frequency range.

Online Mode

Figure 2-5 indicates the route that the electric energy runs through the UPS system in Online mode.

Copyright © 2025 Santak Corporation plc. All rights reserved.

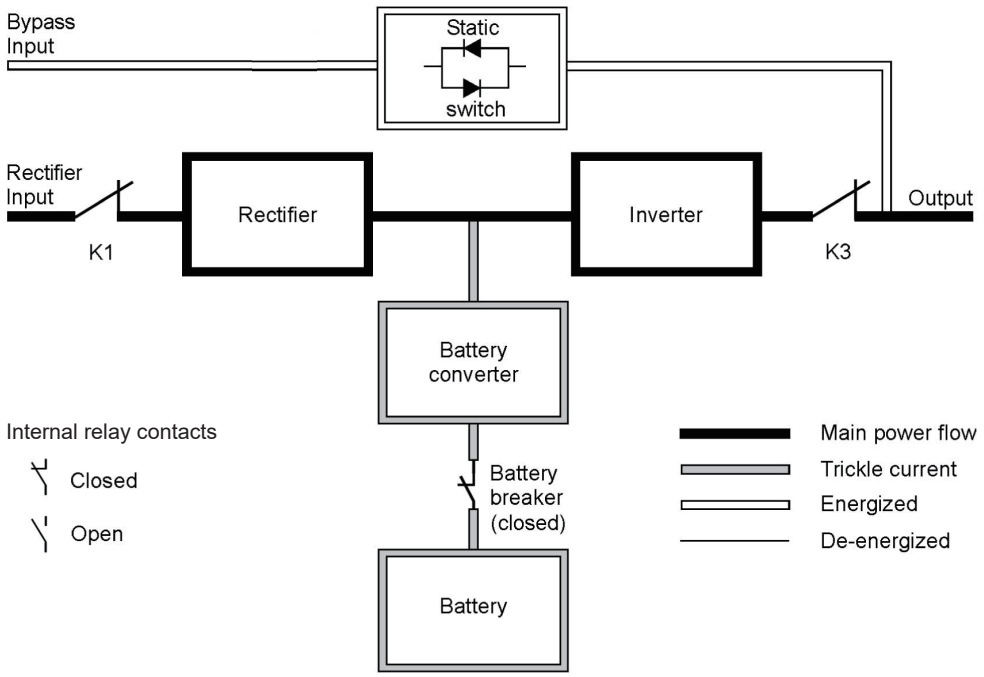

Figure 2-5: Route of the electric energy running through the UPS in Online mode

The 3-phase AC input power supply is converted into stable DC voltage through a multi-level converter composed of IGBT before it's supplied to the inverter. On the display, the state of the UPS is shown as "Online Mode", and the UPS is in "In Service" state.

The input to the battery converter is the DC output from the rectifier, and supplies adjustable charging current to the battery. The UPS is usually connected to a battery, and it supplies energy to the inverter when AC input is unavailable.

The inverter supplies 3-phase AC output to the load. The inverter converts the output DC power of the rectifier to controllable AC output by the multi-level conversion function of IGBT and PWM.

If the input AC power fails or is out of range, the UPS will switch to battery mode automatically to supply uninterrupted power to the load. When AC power recovers, the UPS can switch to Online mode automatically.

If Online mode is overloaded or unavailable, the UPS can accurately switch to bypass mode and supply power to the load via the static bypass. In the case of any abnormal circumstance (e.g., the overload removal takes long or the operation parameters restore to the specified range), the UPS can return to Online mode automatically.

When redundancy is not available to the UPS due to large load, the UPS will switch to bypass mode automatically and maintain at the mode until the failure is fixed during maintenance, and the UPS turns normal.

In an external parallel redundant system, each UPS can be isolated from the system to facilitate maintenance, while other UPSs continue to supply power to the load in Online mode.

Copyright © 2025 Santak Corporation plc. All rights reserved.

ECO Mode

In ECO mode, the UPS supplies safe bus current to the load. ECO mode requires AC power that is within an acceptable voltage and frequency range. On the display, the state of the UPS is shown as “ECO Mode”, and the UPS is in “In Service” state. In ECO mode, the surge suppression and filtering ensures pure electric energy for the load equipment. When any disturbance of input power supply is detected, the UPS will switch to Online mode and continue to supply power to the load via the inverter. If the input AC power fails or exceeds the system specifications, the UPS will switch to battery mode automatically to supply uninterrupted power to the load.

In ECO mode, the UPS constantly monitors the quality of power supply using a detection and control algorithm, so as to meet the needs of quick mode switching. The UPS is usually capable of switching to Online mode accurately in less than 2ms.

When the input power supply is within an acceptable range, the UPS works in a high-efficiency energy saving mode - protecting the equipment and supplying pure power to the equipment. Within 20–100% of the rated load, the system efficiency is as high as 99% in ECO mode.

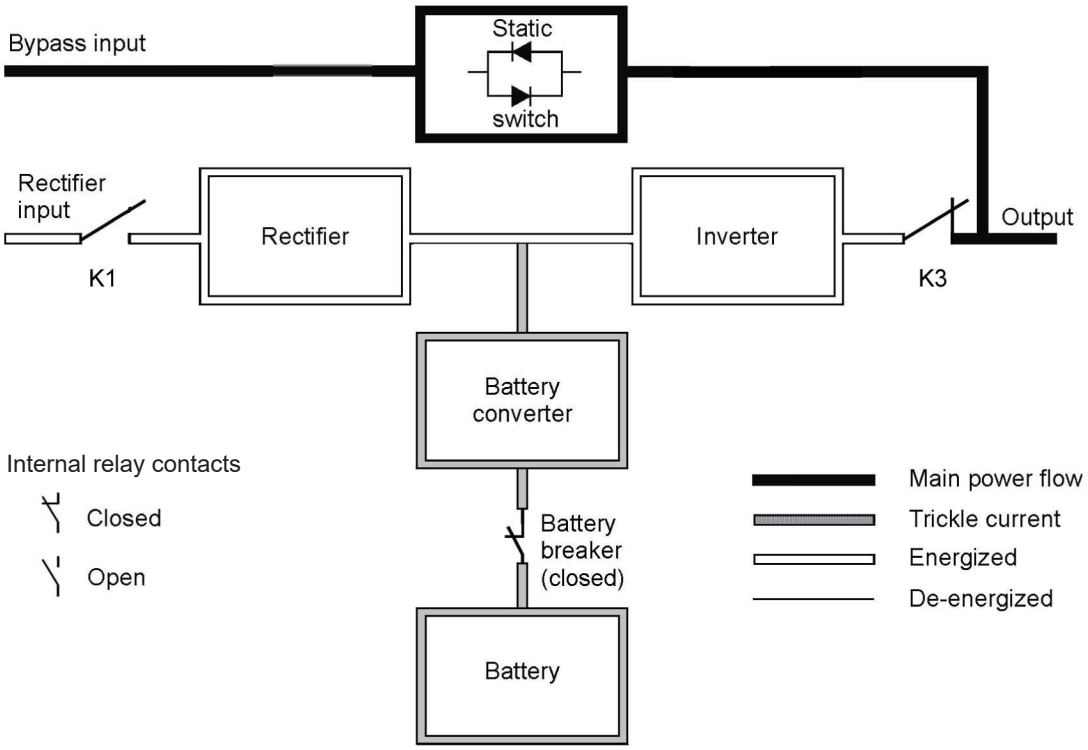

Figure 2-6: Route of the electric energy running through the UPS in ECO mode

Copyright © 2025 Santak Corporation plc. All rights reserved.

2.2.2. Battery Mode

In Online mode or ECO mode, the UPS will supply power to the load through the battery or other energy storage if AC power fails or AC power is not in compliance with the specified parameters. On the display, the state of the UPS is shown as “Battery Mode”, and the UPS is in “In Service” state. In battery mode, the battery supplies emergency DC power, which will be converted to controllable output by the inverter. *Figure 2-7* indicates the route of the electric energy running through the UPS in battery mode.

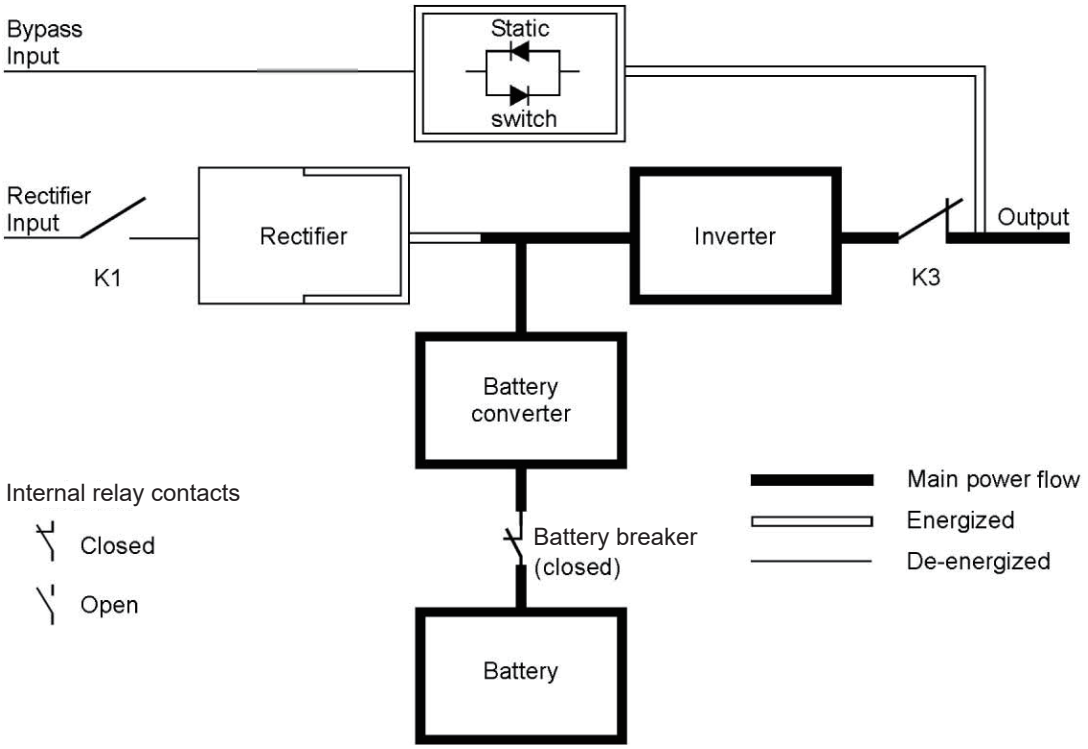

Figure 2-7: Route of the electric energy running through the UPS in battery mode

When AC power fails, the rectifier cannot convert AC power into DC output to supply the inverter. The input relay K1 will be switched off, and the battery will supply UPS output via the inverter. As the inverter runs uninterruptedly during the conversion process, the UPS can supply uninterruptible power to the load continuously. If the static bypass and the rectifier of the UPS are energized by AC power, the battery will discharge to a very low voltage when the AC power and static bypass cannot restore or AC power is not within the specified range necessary for normal system operation. At this moment, the inverter cannot continue to supply power to the load. In this event, the UPS will give an audible and visual alarm, indicating that the battery capacity is very low and the system will shut down soon. Unless AC power recovers, the UPS can support output for 2 minutes at most before the system shutdown. If a bypass battery is available, the UPS will switch to bypass mode rather than shut down.

Whenever AC power recovers again during the battery discharge, K1 will be closed, and the UPS will return to online operation mode. The UPS will start charging the battery to recover its capacity.

Copyright © 2025 Santak Corporation plc. All rights reserved.

2.2.3. Bypass Mode

If any overload, load error or internal failure is detected, the UPS will switch to bypass mode automatically. The bypass will supply AC power to the load directly. The UPS can also be switched to bypass mode manually though the display. On the display, the state of the UPS is shown as “Bypass Mode”. *Figure 2-8* indicates the route of the electric energy running through the UPS in bypass mode.

CAUTION

The critical load is not protected in bypass Mode.

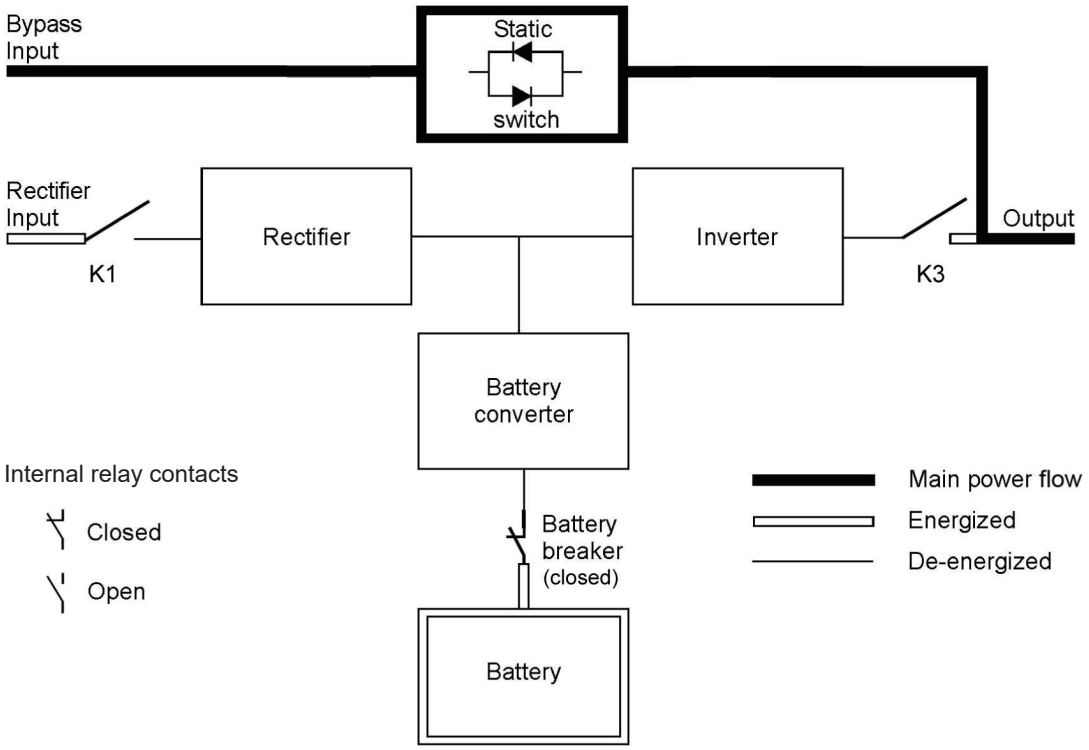

Figure 2-8: Route of the electric energy running through the UPS in bypass mode

In bypass mode, the 3-phase AC output of the system is supplied by system input directly. In this mode, the system output cannot avoid fluctuation of AC voltage or frequency, or blackout. In bypass mode, partial filters and transient protection are provided, but power correction and battery backup are not supported.

The static bypass is composed of a SCR and a SSW. When the inverter cannot support the load, the static switch will work continuously. As an electronic controller unit, the static switch can be enabled immediately to replace the inverter in supplying uninterrupted power to the load.

Copyright © 2025 Santak Corporation plc. All rights reserved.

2.3. Features of the UPS

Santak UPS has a variety of features to ensure cost effectiveness, and consistent and reliable power supply protection. This section will provide a brief summary about the standard features of the UPS.

2.3.1. Advanced Battery Management(ABM)

Precise sampling route and 3-stage charging technology are employed for advanced battery management (ABM), which can prolong the service life of the UPS battery while also increasing the charge speed. The ABM technology can prevent battery damage that might be caused by bulk charge and ripple current of the inverter. Bulk charge may cause battery overheat and damage.

In charge mode, the UPS will charge the battery. The battery is charged to the floating charge voltage preset in the system. When the battery reaches the floating charge voltage, the UPS battery charger enters the floating charge stage and begins to charge the battery at a constant voltage.

Upon completion of charge, it will enter sleep mode, namely after 48h floating charge (adjustable). In sleep mode, the battery charger is turned off completely. In sleep mode that lasts around 28 days (adjustable), the battery is not charged by any charging current. In sleep mode, the UPS will monitor the battery voltage constantly, and recharge the battery where necessary.

2.3.2. Hot Sync

Hot Sync technology is an algorithm that eliminates the single point of failure in a parallel system and therefore enhances the system reliability.

3C3 HD series UPS external parallel system adopts thermal synchronization technology.

Hot Sync technology enables all uninterruptible power (UPS) to operate independently in a parallel system.

Hot Sync technology combines digital signal processing and an advanced control algorithm to provide automatic load sharing and selective tripping in a parallel UPS system. The load share control algorithms maintain synchronization and load balance by constantly making minute adjustments to variations in the output power requirements. The modules conform to demand and are not in conflict with each other for the load. Hot Sync systems are capable of paralleling for both redundancy and capacity.

2.3.3. Software and communication features

2.3.4. User interface

3C3 HD UPS contains 2 communication slots to accommodate mini-slot communication cards. Mini-slot can be installed quickly and support hot plug. Please see *Chapter 5* Communication Interface for other information

Copyright © 2025 Santak Corporation plc. All rights reserved.

2.3.5. Power supply management software

Smart power software is used for online monitoring and management of the power supply device. Please see *Chapter 5* Communication Interface for other information.

2.4. Battery system

The battery system provides emergency backup power supply for short-time use to ensure the safety operation upon blackout, power outage or any other power supply failure. The UPS uses the VRLA battery in default configuration. If you intend to install other types of battery or use other energy storage devices, please consult Santak. 3C3 HD UPS contains no battery, and supports external battery only. Please see *Chapter 8* Technical Parameters for the detailed battery specifications.

Copyright © 2025 Santak Corporation plc. All rights reserved.

Chapter 3 UPS INSTALLATION PLAN

Install the UPS system in accordance with the following order:

1. Draft an installation plan for the UPS system (*Chapter 3*)
2. Select an installation site for the UPS system (*Chapter 3*)
3. Inspect and open the UPS cabinet (*Chapter 4*)
4. Unload and install the UPS cabinet, then install system circuits (*Chapter 4*)
5. Install any accessories or optional parts if needed (*Chapter 4*)
6. Fill out the installation checklist (*Chapter 10* Installation Checklist).
7. Have authorized service personnel perform preliminary operational checks and startup.

NOTE

Startup and operational checks must be performed by an authorized Santak Customer Service Engineer, or the warranty terms specified in *Chapter 9* become void. This service is offered as part of the sales contract for the UPS. Contact service in advance (usually a two-week notice is required) to reserve a preferred startup date.

CAUTION

Make sure that the line input supply is disconnected from the UPS during installation..

WARNING

- **The installation shall be carried out by qualified technicians in accordance with the applicable safety standard.**

3.1. Creating an Installation Plan

Before installing the UPS system, please read carefully and understand all information about system components to be installed in this manual. Formulate a reasonable installation plan based on the relevant procedures and figures in Section *3.2 and the content of Chapter 4* .

Copyright © 2025 Santak Corporation plc. All rights reserved.

3.2. Site Preparations

For the UPS system to operate at peak efficiency, the installation site shall meet the environmental parameters outlined in this manual. The operating environment must meet weight, cleanliness and specific environmental requirements.

3.2.1. Environmental and Installation precautions

The air duct inlet environment must meet the following conditions:

- A difference of at least 1 Celsius degree (1.8 degrees Fahrenheit) shall be kept between the dry bulb temperature and wet bulb temperature of the hygroscope to avoid condensation.
- According to ASHRAE90.1-2013, the maximum ambient temperature variation rate shall be less than 3 degrees Fahrenheit/5 min (36 degrees Fahrenheit/h).

Precautions for environmental conditions for UPS operation:

The cooling methods used by some data centers may cause the UPS equipment room and/or the data center's internal temperature and relative humidity to be uneven. This cooling mode may cause two problems:

- Firstly, it causes microclimate in the machine room. The microclimate can lead to persistent variations of temperature and/or relative humidity within the room. For example, one side of the room is always cooler than the other, regardless of the actual temperature.
- Second, it may induce variation in the temperature and/or relative humidity. This problem occurs during the cooling system's operating transitions.

Either of the above problems may lead to an unfavorable microclimate in the place where the UPS is located. If the conditions in this microclimate exceed our company's operating specifications, the UPS system's stability may deteriorate over time. At the same time, these extreme environments may also affect the stability of servers exposed therein.

The following guidance applies when installing the UPS system:

- The system shall be installed on a flat floor suitable for computers and electronic devices.
- The UPS shall be installed in a clean, stable environment free of vibration, dust, high humidity, flammable gases, flammable liquids, or corrosive substances.
- The ambient temperature of the UPS shall be controlled within 0–40˚C.
- It is advised that the battery pack shall be used in an ambient temperature within +20–+25˚C.
- Maximum relative humidity: 95%, non-condensing.
- This system must be installed in an indoor area with suitable temperature and humidity, free of contaminants.
- The UPS shall normally operate at an altitude lower than 1,000m (3,300ft.). If it is to be used at an altitude over 2,000m (6,600ft.), please contact with Santak for more information.
- The warranty shall be invalid for failure to follow this guideline.

Copyright © 2025 Santak Corporation plc. All rights reserved.

The working environment of the UPS shall meet the weight and size requirements provided in *Table 3-1*.

When ignored, either one of these aspects can create an undesirable microclimate at the UPS location. If the environment created by this microclimate exceeds the Santak UPS operating specification, the UPS reliability, over time, will be reduced. These same environmental extremes will also create reliability concerns for any servers that are exposed to them.

The UPS system installation must meet the following guidelines:

- The system must be installed on a level floor suitable for computer or electronic equipment. The floor must be suitable for heavy weight and wheeling.
- The system must be installed in a temperature and humidity controlled indoor area free of conductive contaminants.
- The cabinet can be installed in line-up-and-match or standalone configurations.

The UPS equipment operating environment must meet the weight requirements shown in *Table 3-1*.

Table 3-1: Dimensions and Weights

Description	Packaging size (WxHxD)	Cabinet dimensions (WxDxH)	Gross weight	Net weight
20kVA	460 x 765 x 800 mm	330 x 521 x 668 mm	50kg	41kg
30kVA	460 x 765 x 800 mm	330 x 521 x 668 mm	55kg	45kg
40kVA	460 x 765 x 800 mm	330 x 521 x 668 mm	55kg	45kg
60kVA	585 x 1148 x 880 mm	330 x 973 x 690 mm	131kg	90kg
80kVA	585 x 1148 x 880 mm	330 x 973 x 690 mm	131kg	90kg

*:As the UPS cabinet controls the temperature of internal components by forced cooling, sufficient space shall be reserved to ensure sound air circulation. Please see *Figure 3-1* for the method of heat radiation. Please see *Table 3-2* for the reserved space.

Copyright © 2025 Santak Corporation plc. All rights reserved.

Table 3-2: Space reservation for the UPS cabinet

	Exhaust Clearance
Above the cabinet D1	300 mm
In front of the cabinet D2	900 mm
Behind the cabinet D3	600 mm

* Wiring might need larger space.

The picture takes a 60kW cabinet as an example

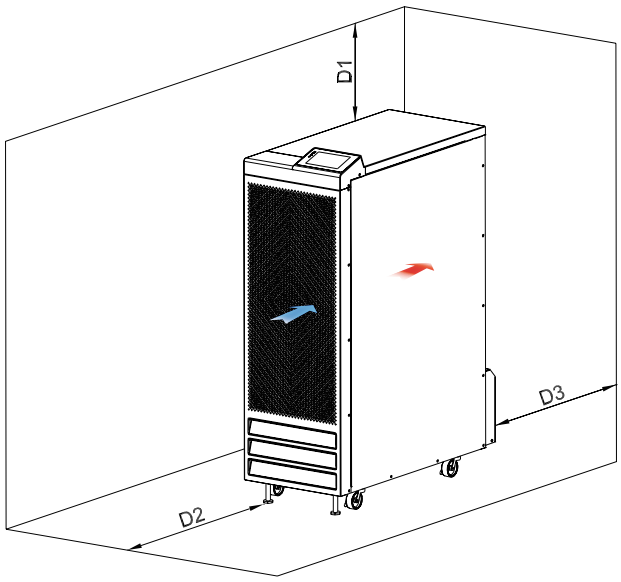

Figure 3-1: Clearance for the UPS cabinet.

- Refer to *Table 3-2* and *Figure 3-1* for clearance details. Please reserve minimum 600mm clearance on the side of the UPS for maintenance. If there is insufficient space on both sides, please reserve minimum 800mm cable length at D3 to pull out the UPS to the front for maintenance.

The UPS and battery can achieve a longer service life if the ambient temperature is maintained within 20–25˚C.

The ambient temperature of the UPS shall be controlled within 0–40˚C. If working at temperatures above 40˚C, the use shall be derated.

The maximum ambient temperature of the UPS shall not exceed 50˚C during operation, and high temperature and high humidity shall be avoided.

Copyright © 2025 Santak Corporation plc. All rights reserved.

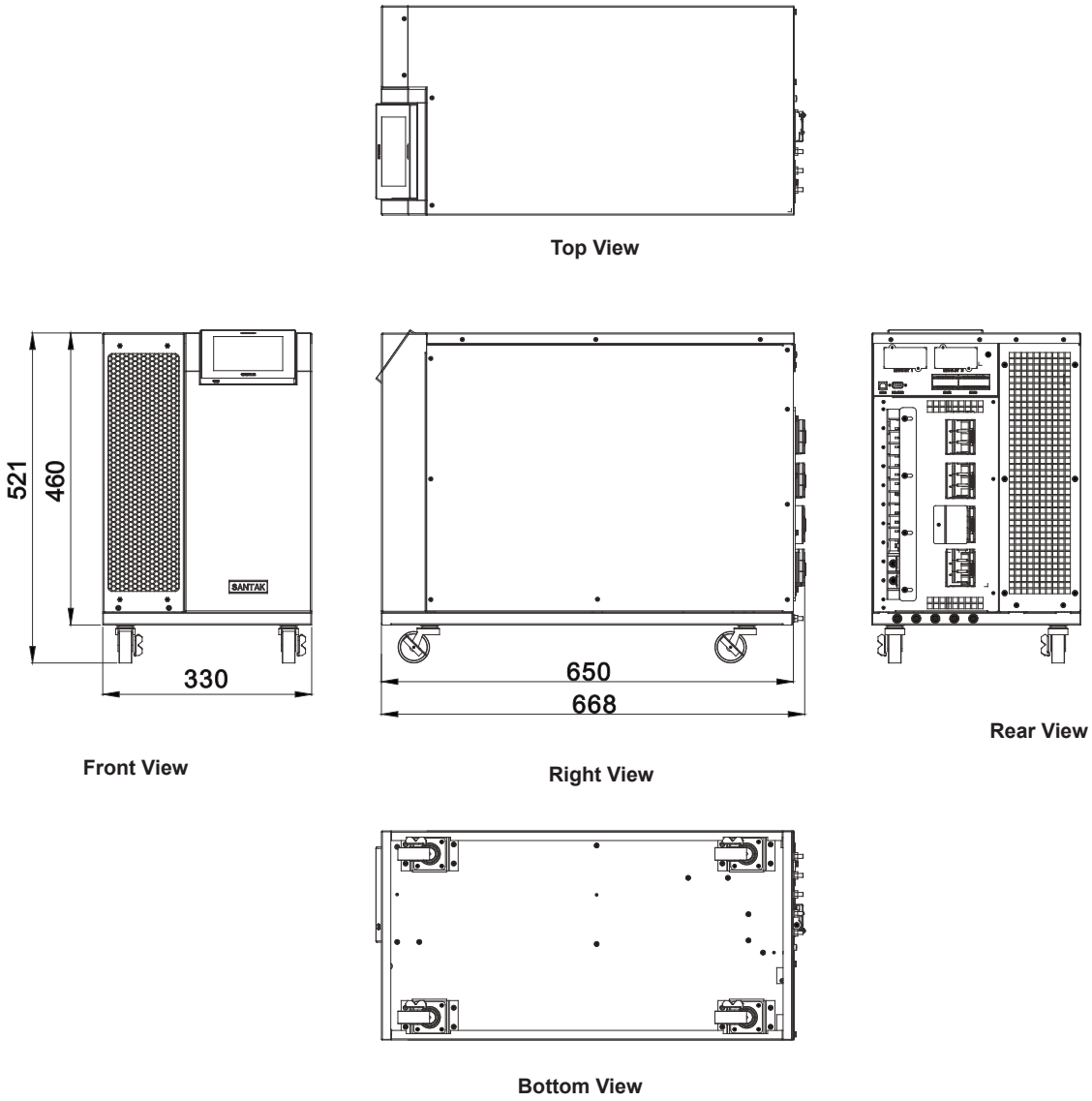

Figure 3-2: UPS dimensions (20–40k)

Unit: mm

Copyright © 2025 Santak Corporation plc. All rights reserved.

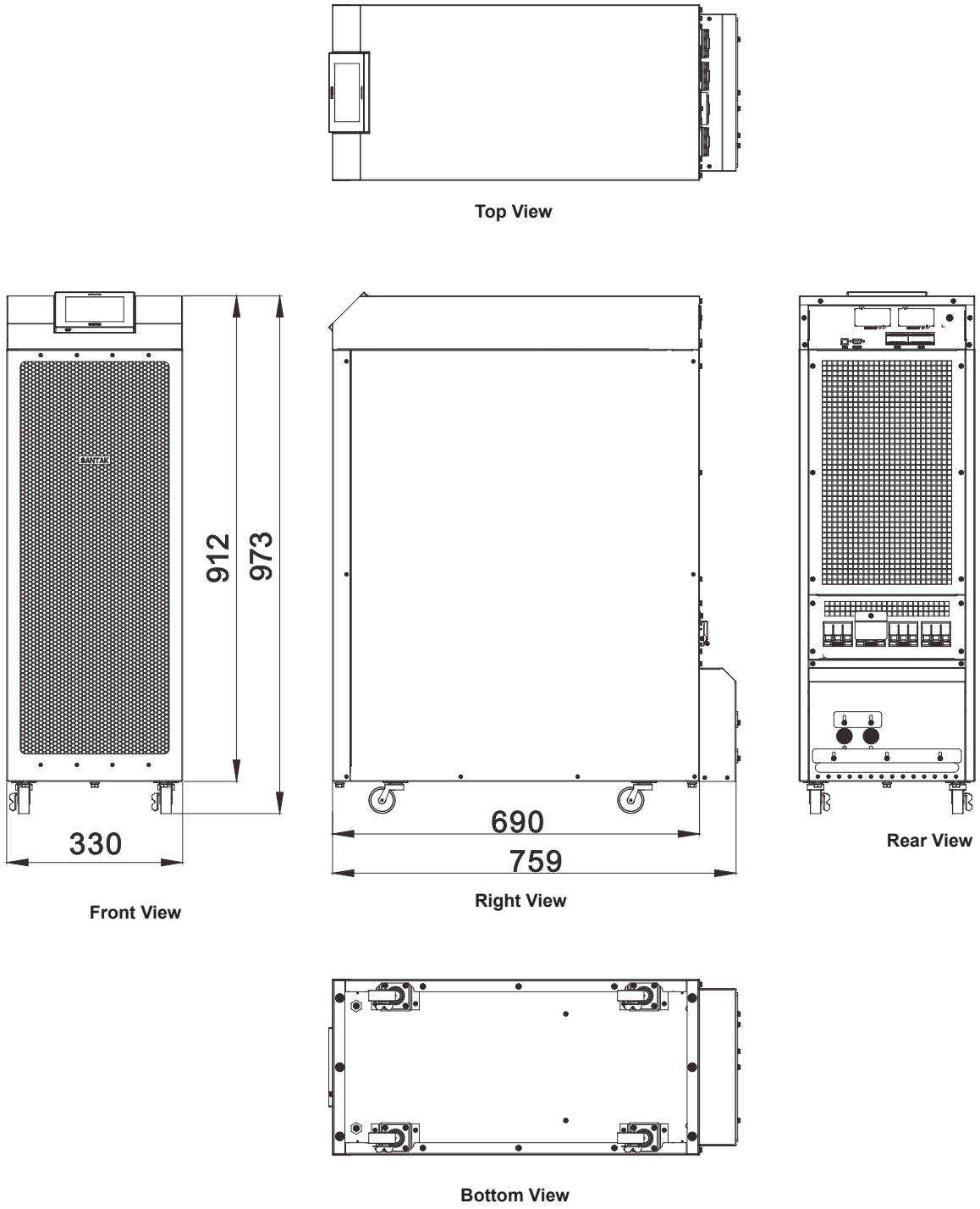

Figure 3-3: UPS dimensions (60–80k)

Unit: mm

Copyright © 2025 Santak Corporation plc. All rights reserved.

3.2.2. Power supply and wiring preparation of the UPS system

CAUTION

For maintenance bypass installation, dual-feed input protected by an upstream circuit breaker or single-feed input protected by two upstream circuit breakers shall be adopted. Wherein, one is for UPS/rectifier input breaker (if installed), and the other is for the maintenance bypass input. It's forbidden to merely employ single-feed and single-breaker protection for UPS/rectifier input and maintenance bypass. If the UPS adopts single feeder line and a bypass input breaker is mounted on the maintenance bypass, maintenance bypass single-feed input is allowed, and power can be supplied to the UPS and bypass simultaneously.

As for the actual configuration of external wiring, please refer to the local or national electrical specifications:

- To facilitate future expansion, power line and external overcurrent protection switch shall be selected for derating under full load.
- Materials and operations for external wiring requirements shall be supplied and performed by designated personnel.
- External wiring shall adopt the copper wire capable of withstanding 105˚C. Please see relevant information in *Table 3-3*. The wire size depends on the circuit breaker.
- If the operation temperature of conductor is above 40˚C, it's necessary to use the wire that is thicker or capable of withstanding higher temperatures.
- The wiring specifications are defined by copper wire at 105˚C.

4-wire system:

- The input adopts three live wires and an N wire, in addition to a grounding conductor (protective grounding conductor). To ensure the normal operation of the equipment, the phase lines must be grounded in a symmetric manner (from Y-type/star-type power supply).
- Support loads with N wire.
- For UPS systems configured with a 4-Pole ATS or generator, make sure the switching of the upstream ATS will not cause disconnection of N wire, or the input N wire disconnection is recovered before low battery voltage alert:
- When the N wire is disconnected, all phase lines shall be disconnected as well.

The wire with appropriate size shall be used to facilitate future upgrade.

Copyright © 2025 Santak Corporation plc. All rights reserved.

Table 3-3: Requirements on rated input/output and external wiring of the UPS (unit:mm^2)

Rated capacity	Cross-sectional Refer to IEC 62040-1	**Unit**					
		kVA kW	20 20	30 30	40 40	60 60	80 80
Input/output voltage		Volts	400/400	400/400	400/400	400/400	400/400
AC input to the UPS rectifier Full load current plus battery charging current (3) Phases		Amps	36	54	72	108	144
Conductor specifications (Phase A, B, C) (quantity and size)	min	mm2	1×6	1×10	1×13	1×20	1×25
	max	mm2	1×10	1×16	1×16	1×50	1×50
AC input to the UPS bypass (five lines, dual inputs) Full load current (3) Phases		Amps	29	43	58	86	114
Conductor specifications (Phase A, B, C) (quantity and size)	min	mm2	1×6	1×10	1×13	1×20	1×25
	max	mm2	1×10	1×16	1×16	1×50	1×50
DC input from the battery to the UPS (1) Root positive wire, (1) Root negative wire, (1) Root N wire		Total Amps	66	99	132	197	263
Conductor specifications (positive, negative and N) (Quantity and size)	min	mm2	1×13	1×20	1×25	1×35	1×50
	max	mm2	1×16	1×50	1×50	1×70	1×70
AC output to the critical load (5 lines) Full load current (3) Phases		Amps	29	43	58	86	114
Conductor specifications (Phase A, B, C) (quantity and size)	min	mm2	1×6	1×10	1×13	1×20	1×25
	max	mm2	1×10	1×16	1×16	1×50	1×50
Grounding	1.7 time						
Neutral wire (N) (AC/load) (nonlinear load)	1.7 times						
Backfeed protection device	Electrical clearance upon breaking of contact: ≧2.0mm Break time: ≦15s						

Copyright © 2025 Santak Corporation plc. All rights reserved.

CAUTION

- **The above wire sizes are recommended only, other than compulsory. The actual configuration needs to be determined according to the standard of the region and the actual conditions of users.**
- **This product does not provide any external overcurrent protector, but shall comply with local regulatory requirements. If input/output disconnecting devices need to be installed, they shall be supplied by the customer.**
- **An even number of batteries shall be used, and battery N wire shall be provided.**

Table 3-4: Requirements on 20k connecting terminals and torque

Terminal functions	Terminals	Functions	Dimensions of connecting terminals	Fastening torque (Nm)	Bolt specifications
AC mains input to UPS rectifier	L1	A phase	M5	2 (17.7)	13.3 mm²(M5)
	L2	B phase	M5	2 (17.7)	13.3 mm²(M5)
	L3	C phase	M5	2 (17.7)	13.3 mm²(M5)
	N	N	M5	2 (17.7)	13.3 mm²(M5)
AC mains input to bypass	L1	A phase	M5	2 (17.7)	13.3 mm²(M5)
	L2	B phase	M5	2 (17.7)	13.3 mm²(M5)
	L3	C phase	M5	2 (17.7)	13.3 mm²(M5)
	N	N	M5	2 (17.7)	13.3 mm²(M5)
UPS output to loads	L1	A phase	M5	2 (17.7)	13.3 mm²(M5)
	L2	B phase	M5	2 (17.7)	13.3 mm²(M5)
	L3	C phase	M5	2 (17.7)	13.3 mm²(M5)
	N	N	M5	2 (17.7)	13.3 mm²(M5)
DC input	+	Battery (+)	M5	2 (17.7)	13.3 mm²(M5)
	-	Battery (-)	M5	2 (17.7)	13.3 mm²(M5)
	N	Battery (N)	M5	2 (17.7)	13.3 mm²(M5)
User grounding	Grounding		M8	15 (133)	60 mm²(M8)

Copyright © 2025 Santak Corporation plc. All rights reserved.

Table 3-5: Requirements on 30–40K connecting terminals and torques

Terminal functions	Terminals	Functions	Dimensions of connecting terminals	Fastening torque (Nm)	Bolt specifications
AC mains input to UPS rectifier	L1	A phase	M5	2 (17.7)	13.3 mm²(M5)
	L2	B phase	M5	2 (17.7)	13.3 mm²(M5)
	L3	C phase	M5	2 (17.7)	13.3 mm²(M5)
	N	N	M5	2 (17.7)	13.3 mm²(M5)
AC mains input to bypass	L1	A phase	M5	2 (17.7)	13.3 mm²(M5)
	L2	B phase	M5	2 (17.7)	13.3 mm²(M5)
	L3	C phase	M5	2 (17.7)	13.3 mm²(M5)
	N	N	M5	2 (17.7)	13.3 mm²(M5)
UPS output to loads	L1	A phase	M5	2 (17.7)	13.3 mm²(M5)
	L2	B phase	M5	2 (17.7)	13.3 mm²(M5)
	L3	C phase	M5	2 (17.7)	13.3 mm²(M5)
	N	N	M5	2 (17.7)	13.3 mm²(M5)
DC input	+	Battery (+)	M8	15 (133)	60 mm²(M8)
	-	Battery (-)	M8	15 (133)	60 mm²(M8)
	N	Battery (N)	M8	15 (133)	60 mm²(M8)
User grounding	Grounding		M8	15 (133)	60 mm²(M8)

Copyright © 2025 Santak Corporation plc. All rights reserved.

Table 3-6: Requirements on 60–80K connecting terminals and torques

Terminal functions	Terminals	Functions	Dimensions of connecting terminals	Fastening torque (Nm)	Bolt specifications
AC mains input to UPS rectifier	L1	A phase	M8	15 (133)	60 mm²(M8)
	L2	B phase	M8	15 (133)	60 mm²(M8)
	L3	C phase	M8	15 (133)	60 mm²(M8)
	N	N	M8	15 (133)	60 mm²(M8)
AC mains input to bypass	L1	A phase	M8	15 (133)	60 mm²(M8)
	L2	B phase	M8	15 (133)	60 mm²(M8)
	L3	C phase	M8	15 (133)	60 mm²(M8)
	N	N	M8	15 (133)	60 mm²(M8)
UPS output to loads	L1	A phase	M8	15 (133)	60 mm²(M8)
	L2	B phase	M8	15 (133)	60 mm²(M8)
	L3	C phase	M8	15 (133)	60 mm²(M8)
	N	N	M8	15 (133)	60 mm²(M8)
DC input	+	Battery (+)	M10	28 (248)	150 mm²(M10)
	-	Battery (-)	M10	28 (248)	150 mm²(M10)
	N	Battery (N)	M10	28 (248)	150 mm²(M10)
User grounding	Grounding		M8	15 (133)	60 mm²(M8)

CAUTION

This product does not provide any external overcurrent protector, but shall comply with local regulatory requirements. If input/output disconnecting devices need to be installed, they shall be supplied by the customer.

CAUTION

- **To avoid the risk of fire, the rated current of the circuit breaker shall not be less than the specifications provided in** *Table 3-3*.
- **If the UPS carries the imbalanced load, the use shall be derated at the full load current under balanced load. The line current under imbalanced load shall be <= 50% of the full-load current under balanced load. See** *Table 3-3*
- **Power supply protection for AC input to bypass shall conform to the load characteristics of the surge or starting current. The overcurrent protection switches for the bypass and output shall be provided by the customer.**
- **For wiring diagram of the UPS, see Section *2.1* Internal structure of UPS system.**

Copyright © 2025 Santak Corporation plc. All rights reserved.

3.2.3. Preparation for UPS interface wiring

External control communication lines shall be connected to the user interface terminal block inside the UPS.

WARNING

The feedback contact of the contactor shall not be connected to the circuit relevant to the main power supply, and the insulation of the feedback contact shall be strengthened.

When the installation is planned and prepared, please carefully read and understand the following matters:

- All interface wiring shall be supplied by the customer.
- Internal interface wiring of Mini-slot terminals shall be carried out through the Mini-slot communication slots.
- Between the external alarm input and the dry node, all the signal input or remote feature requirements need a normal-open isolating contactor or switch with rated value of 24VDC, 20mA at minimum. All control lines, relays and switch contactors shall be provided by the customer. Twisted-pair cables shall be provided for each external alarm input and dry node.
- The LAN and telephone access using Mini-slot card shall be provided by the facility planner or customer.
- The remote EPO function can open all the contactors inside the UPS cabinet, and isolate the power supply from the critical load. Local electrical regulations might require installing an upstream tripping protection device for the UPS.
- The remote EPO switch must be an independent switch, and shall not be connected to other circuits.
- In the case of normal-close (NC) remote EPO, it’s necessary to place a jumper between Pin3 and Pin4 of CN10.
- The wire size of remote EPO shall be within 0.75–2.5 mm².
- The distance between the remote EPO and the UPS shall not exceed 150m.
- The external alarm relay needs to connect with a switch with a rated current of 5A, a rated voltage of 30VAC (RMS)/30VDC.
- The wire size of the external alarm relay shall not be smaller than 0.75 mm².

Copyright © 2025 Santak Corporation plc. All rights reserved.

Chapter 4 UPS SYSTEM INSTALLATION

The customer has to supply the wiring to connect the UPS to the local power source. The electrical installation procedure is described in the following section.

The installation inspection and the initial start-up of the UPS and installing an extra battery cabinet must be carried out by qualified service personnel such as a licensed service engineer from the manufacturer or from an agent authorized by the manufacturer.

4.1. Preliminary Installation Information

WARNING

Failure to observe the instructions in this operating manual may cause risk of injury to personnel or damage to the UPS and load equipment.

Refer to the following when installing the UPS system:

- Please read *Chapter 3* for the cabinet dimensions, equipment weight, wiring and terminal data as well as installation related matters.
- The tilting angle shall not be greater than ±10° when installing the cabinet.
- If perforated floor tiles are required for ventilation, place them in front of the UPS.

4.2. UPS Cabinet Inspection and Unpacking

For the UPS system to operate at peak efficiency, the installation site shall meet the environmental parameters outlined in this manual. The operating environment must meet weight, cleanliness and specific environmental requirements.

WARNING

- **The UPS cabinet is very heavy. See *Table 3-1* for the weight information. If the loading and unloading instructions are not strictly followed, the cabinet may fall and cause serious personal injury.**
- **Do not stand in front of the pallet when unloading the cabinet. If the unloading instructions are not strictly followed, the cabinet may cause serious personal injury.**

1. Carefully inspect the outer package for obvious damage during handling. Check whether the "tilt indication label" on the outer box of the equipment is in normal condition. Stop operation if you find any damage to it, and notify the carrier or dealer.

Copyright © 2025 Santak Corporation plc. All rights reserved.

NOTE

Before performing the following steps, make sure that the forklift or pallet lift can support the cabinet's weight (see *Table 3-1* for the cabinet's weight).

2. Please move the UPS together with the pallet to the installation site or a place far away from the installation site by a forklift or pallet lift.

CAUTION

- **Do not tilt the cabinet more than 10° from vertical line, otherwise the cabinet may tip over.**

3. Open the carton (20–40k) or wooden box (60–80k), and remove the cushioning materials and damp-proof bag (*Figure 4-1* –*Figure 4-2*).
4. Move the equipment from the pallet onto the ground
   a 20–40k, remove the screws fixing the equipment and the retaining rack at the bottom, and move the equipment onto the ground (*Figure 4-1*).
   b 60–80k, lay the slope board in front of the pallet. Then remove the retaining rack at the bottom of the equipment. At last, slowly slide the equipment onto the ground along the slope board (*Figure 4-2*).

CAUTION

When lifting or moving the cabinet, to prevent damage to the wiring channels and wiring in the base, please make sure that the forklift fork is inserted into the forklift slot horizontally; do not tilt the fork upwards; and the fork must pass through the entire pallet base..

5. Move the equipment to the installation site by using the casters on the bottom.
6. For installing the UPS system, please see Section *4.3* .

NOTE

During the installation waiting period, the unpacked cabinet shall be protected against moisture, dust and other contaminants. The warranty does not cover any damages caused by failure to properly store or protect the UPS.

Copyright © 2025 Santak Corporation plc. All rights reserved.

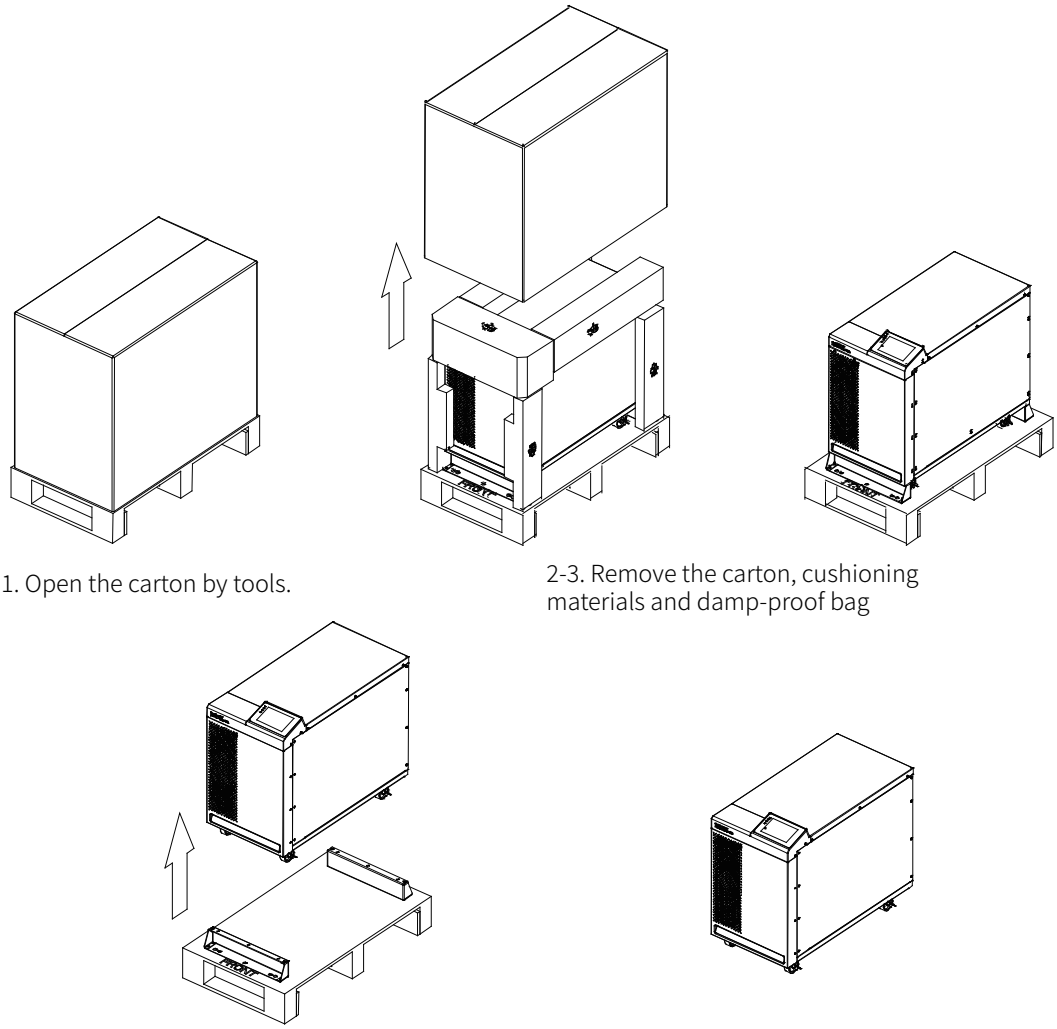

Figure 4-1: 20–40k unpacking diagram

Copyright © 2025 Santak Corporation plc. All rights reserved.

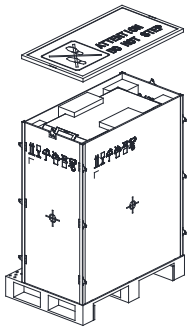

1. Pry open the metal connecting members.

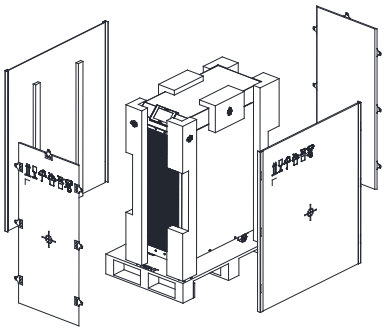

2. Remove the wooden box.

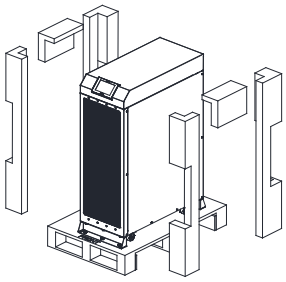

3. Remove the cushioning materials.

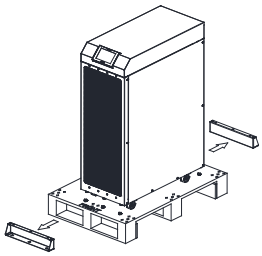

4. Remove the screws fixing the equipment and the retaining rack at the bottom.

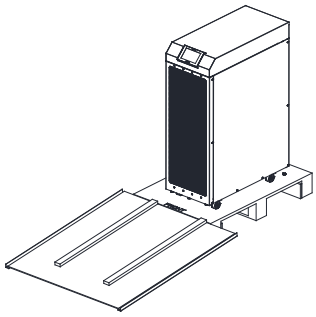

5. Lay the slope board in front of the pallet.

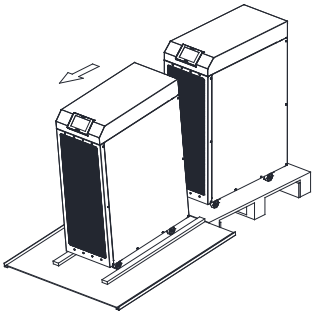

6. Remove the retaining rack at the bottom of the equipment. At last, slowly slide the equipment onto the ground along the slope board.

Figure 4-2: 60–80k unpacking diagram

Copyright © 2025 Santak Corporation plc. All rights reserved.

4.3. System Installation

4.3.1. Mechanical installation

NOTE

- **Before performing the following steps, please make sure that the forklift or pallet lift can bear the cabinet's weight (see *Table 3-1 Dimensions and Weights*).**
- **Do not tilt the cabinet more than 10° from vertical line, otherwise the cabinet may tip over.**

4.3.2. Cable installation

To facilitate installation, the power supply and control signal cables can be led in through the bottom or top part of the cabinet. Please see *Figure 4-3* and *Figure 4-4* for the specific locations .

1. For 20–40k, open the side cover plate (*Figure 4-3*). For 60–80k, open the cover plate of the terminal block (*Figure 4-4*).
   - Put the cables through the wiring port to connect them with the corresponding terminal blocks, and fasten them with the torques specified in Table 3-4/Table 3-5/Table 3-6. Fasten the grounding wire onto the grounding screw (For 20–40k, see (*Figure 4-3*). For 60–80K, see *Figure 4-4*).
2. Arrange the cables and use cable ties to fasten them at the bonding hole, then try to move the adjustable insulating plate leftward to cover and lock the wires and lock it (to prevent the intrusion of sundries).
3. Clear the sundries inside the cabinet before mounting the side cover plate.
4. Install the parallel system, and repeat the above steps for each UPS.
5. Execute the instructions of Section *4.4* Installation of external battery cabinet.

WARNING

Remember to lay the wires on both sides of the cabinet to prevent it from blocking the hot air venting area in the rear part.

Copyright © 2025 Santak Corporation plc. All rights reserved.

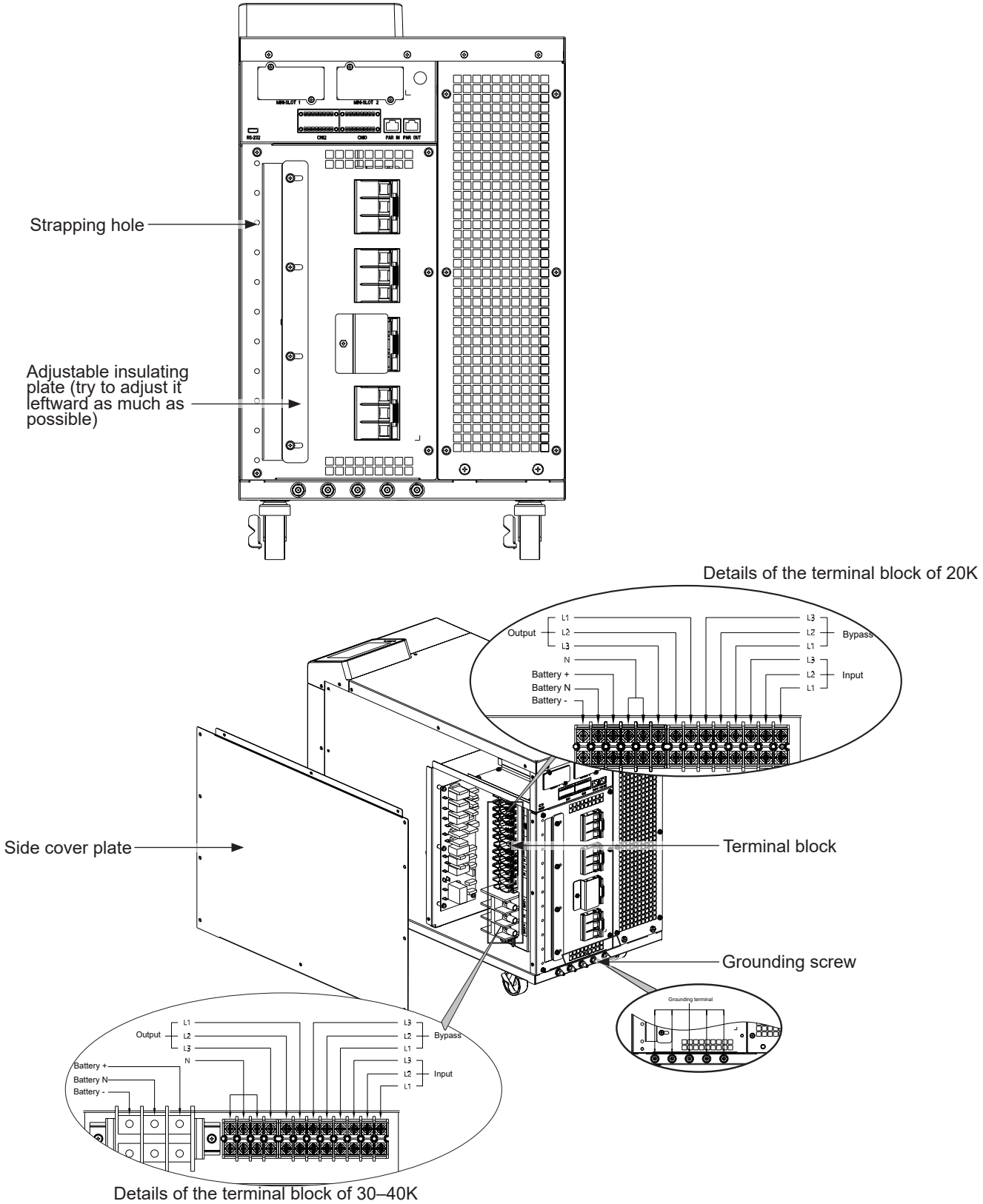

Figure 4-3: Gland Plate and Connector Locations

Copyright © 2025 Santak Corporation plc. All rights reserved.

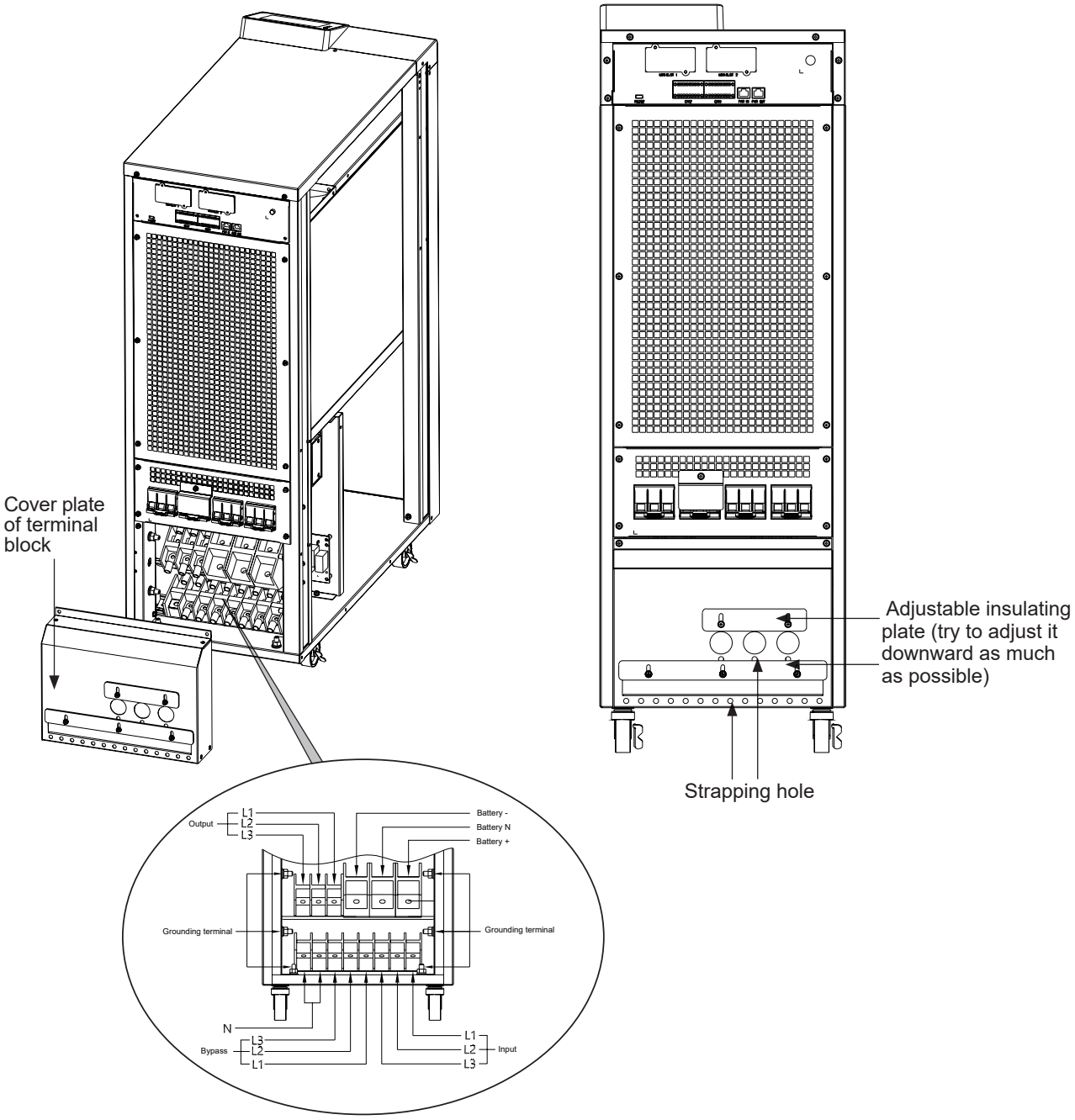

Figure 4-4: Locations of cover plate and connecting terminals (60–80k)

Copyright © 2025 Santak Corporation plc. All rights reserved.

4.4. Installation of external battery cabinet

Before connecting the external battery, please read the cautions and warnings attached to the battery cabinet.

WARNING

- **In the case of failure, the underpan or the frame of the battery cabinet might be live!**
- **Before installing the battery, please ensure that the number of batteries matches the charging voltage settings.**
- **The battery backup duration shall not exceed 1 hour. If the battery backup duration of battery preparation is to exceed 1 hour, please consult relevant professionals.**

WARNING

Valve-regulated batteries are usually used in UPS equipment. The valve-regulated batteries must be sealed. The gas released from the valve-regulated batteries shall be less than that from flooded batteries. However, it's necessary to reserve sufficient space for ventilation and radiation in the battery installation plan. Valve-regulated batteries are not fully maintenance-free. It's necessary to keep them tidy, and check them regularly to ensure they're tightly connected, and there is free of corrosion. As loss of battery capacity is unavoidable during transportation and storage, make sure that the batteries are fully charged before battery self-test, which may last several hours. Through multiple charge-discharge cycles, the battery performance will be improved.

12 VDC VRLA battery is a default configuration for UPS. If you want to use batteries of other types, please contact Santak's agent.

Steps of battery cabinet connection:

1. Shut down the UPS.
2. Check and make sure that all the circuit breakers of the external batteries are at off state.
3. Connect the protective grounding wire.
4. Connect the positive and negative poles of the battery cabinet according to the conductor cross-sectional area of the cable and the cable size suitable for the protection device.
5. Please see the instructions of the manufacturer regarding the battery cabinet.

WARNING

Ensure correct connection of the positive and negative poles of the battery!

Copyright © 2025 Santak Corporation plc. All rights reserved.

4.4.1. Supported battery configurations

In the case of parallel use of 3C3 HD UPS, both common battery and separate battery are supported among the cabinets.

In terms of configuration of separate battery, each UPS is connected to the separate battery cabinet. The battery settings among the cabinets are varied.

Common battery configuration currently only supports parallel connection of 2/3/4 cabinets. Common battery configuration needs each cabinet to be connected to the same battery cabinet.

Multiple DC sources supported include lead-acid batteries, lithium batteries, nickel-cadmium batteries, As for use of lithium batteries, the battery backup time and other battery parameters are subject to the battery management system.

4.5. Wiring of the UPS Parallel System

The rated power of each UPS must be identical, and the rated power of each equipment's static bypass shall also be identical. If exceeding the specified quantity, please contact Santak team for a power distribution design.

The parallel system provides parallel connection or redundant function. This system can provide larger capacity compared to a single UPS, and support flexible configurations to meet customer needs. When one UPS fails or is out of service due to maintenance, the remaining parallel-redundant UPS units will continue to provide uninterruptible power to the critical load.

Among the UPS units there exist actual system monitoring and module control, as communication is needed among the UPS units. The communication and control on the system level are realized by CAN (Controller Area Network). The Pull-Chain signal of each UPS, as hardware redundancy, can carry out synchronous control of bypass even if CAN communication is lost.

WARNING

Do not use the internal MBS (Manual Bypass Switch) of separate UPS in a parallel system.

4.5.1. Overview of power cables

For the specifications and installation methods of cable and external fuse, please see Section *3.2.2* Preparation for UPS Power Supply Wiring.

Rectifier input

The rectifier input is connected to the UPS as a power supply. The input of every UPS system must use a common power source.

Bypass input

The input is connected to the bypass of the UPS. The bypass of every UPS system must use a common power source. The shortest cable between each UPS and the power source shall be greater than 95% of the longest one.

Copyright © 2025 Santak Corporation plc. All rights reserved.

Output

The N wires of all the UPS units must be connected. The shortest cable between each UPS and the power source shall be greater than 95% of the longest one. The measurements start from the output node of the UPS.

Dual power supply

The rectifier input and bypass input are separate power supplies. The power supply must use a common N wire.

Battery connection

In the case of parallel use of Santak 3C3 HD 20-80K, both common battery and separate battery configurations are supported among the cabinets. Please see Section 4.2.1 for information about supporting common battery configuration.

Installation of parallel system, signal wires of parallel system and CAN communication control wires

CAUTION

- **In a parallel system, the electric line from the input of each UPS to the common point of the AC power source shall be identical with that from the output to the common point of the load in length. The length shall meet the following regulations to ensure that the input resistance and output resistance of each UPS matches each other, and resistance error shall be controlled within ±10%. The purpose is to ensure current sharing of parallel UPS. It's advised that the input and output cables of the parallel system are longer than 10m in total, 5m for either input or output.**
- **Total length 1A=2A=3A=4A**

  1B=2B=3B=4B

  1C=2C=3C=4C

  See *Figure 4-5* for the wiring diagram
- **If only two UPS units are connected in parallel (redundancy), the above requirements are not mandatory, but the future expansion might be affected if the requirements are not satisfied.**
- **Ensure that the static bypass input of each UPS in the parallel system is the same common point, like an external bypass circuit breaker. If the rectifier input of each UPS in the parallel system is a separate power source, please consult Santak engineers to ensure the compatibility of power distribution.**

Copyright © 2025 Santak Corporation plc. All rights reserved.

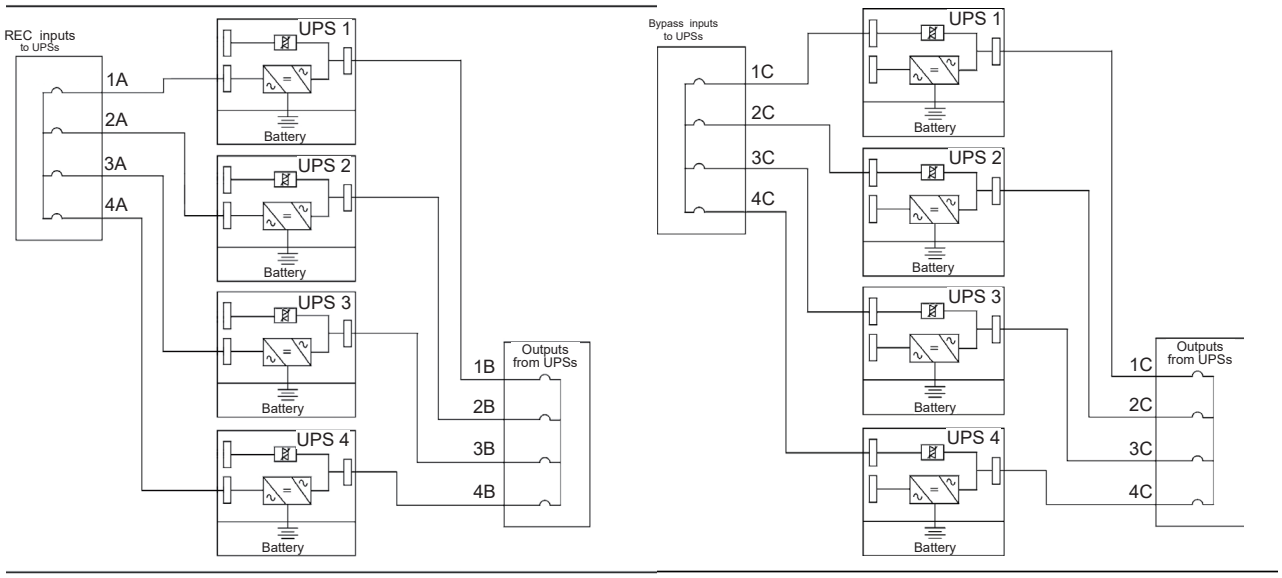

Wiring diagram of the parallel system

Figure 4-5: Schematic diagram of the parallel UPS system

4.5.2. Control signal overview

The external parallel system needs two control signals (external CAN Network, bypass Pull-Chain). The two control signals are employed for the purpose of fault tolerance, namely, when one of them is interrupted, the system can continue normal operation and gives an alarm.

Santak 3C3 HD 20-80K, ECAN and Pull-Chain signals are integrated in an RJ45 terminal, and parallel signal connection is performed by PAR IN/PAR OUT ports. See *Figure 5-1*.

External CAN (ECAN)

External CAN is employed for the purpose of communication between the UPS units in parallel. The system can ensure current sharing and protect the load even when CAN fails.

Bypass Pull-Chain

Bypass Pull-Chain is an open-circuit output signal. When any UPS in the parallel system switches to the bypass, the signal is pulled low. When external CAN (ECAN) doesn’t work, Pull-Chain is pulled low. If the UPS is at online state, the UPS will be locked and switched to bypass mode. In this fault mode, the customer service personnel can short the signal and switch to the bypass.

Signal input actions

Each UPS bears 3 sets of signal inputs which can configure the functions. These functions may affect the UPS in every system.

Wiring of the parallel EPO switch

It’s recommended that each parallel unit uses a separate EPO circuit.

Copyright © 2025 Santak Corporation plc. All rights reserved.

4.5.3. Installation of the parallel control wiring

1. Please perform installation in accordance with the User Manual, and follow the safety requirements
2. The external parallel control signal is connected via two RJ45 ports (PAR IN/PAR OUT). Please see *Figure 5-1* for the location of the communication interface, and see *Figure 4-6* for the wiring.

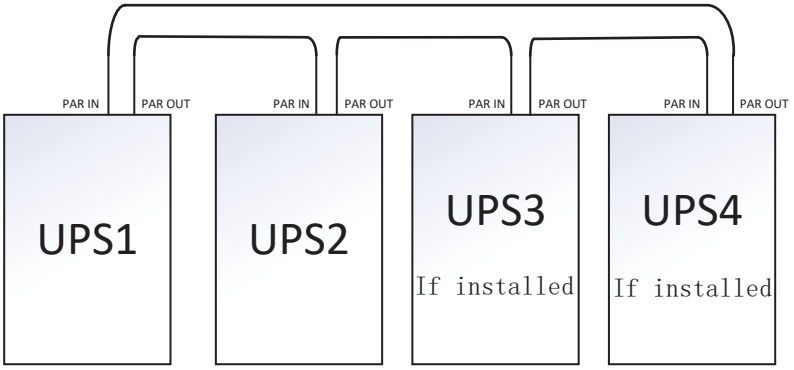

Figure 4-6: Simplified wiring of CAN and Pull-Chain of the parallel UPS system

CAUTION

- **Figure 4-6 represents the parallel wiring diagram and not the physical layout plan. UPS can be arranged in any physical order.**
- **The connection cables used among parallel UPS units shall be of shielded twisted-pair cables.**

Copyright © 2025 Santak Corporation plc. All rights reserved.

Chapter 5 COMMUNICATION INTERFACES

This section will introduce the communication features of Santak 3C3 HD 20-80K UPS.

The communication interface of this UPS is shown as follows:

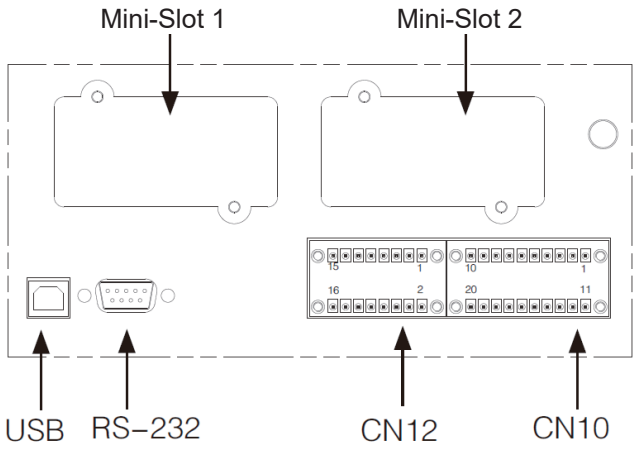

Figure 5-1: Communication Interfaces

Communication Slots: The UPS has two communication slots for installing communication cards. These cards are quick to install and hot-swappable.

CN10：Terminal CN10 includes parallel CAN communication signal, Pull-Chain signal, REPO signal and one relay output.

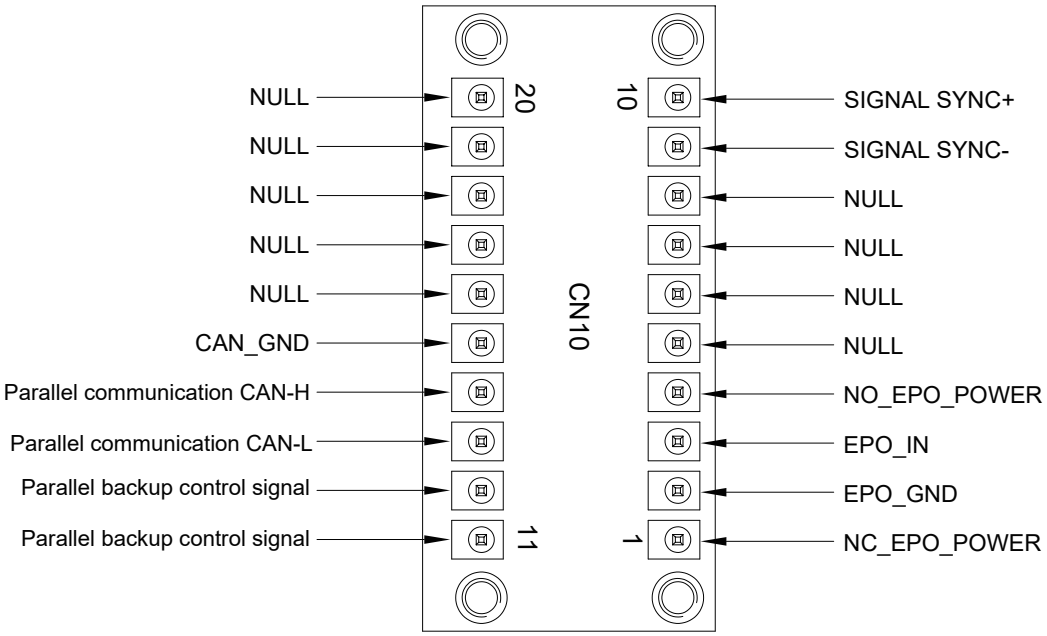

CN10

Copyright © 2025 Santak Corporation plc. All rights reserved.

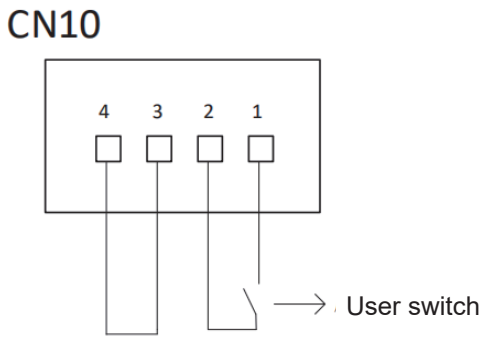

3-4 are connected with a short cable, and keep them connected.
When 1-2 are open, the UPS will perform emergency power off.

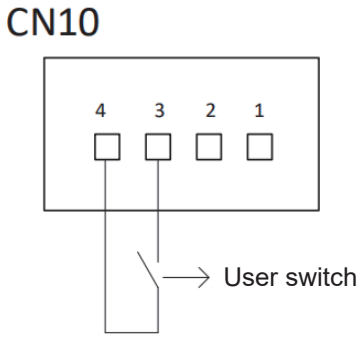

When 3-4 are closed, the UPS will perform emergency power off.
1-2 are idle

CN12：This standard function can be used to connect the external alarm signal to the corresponding terminals of the UPS, e.g., smoke alarm or overheat alarm signal. Please use twisted-pair wires to connect the alarm device and the corresponding UPS terminals. For external alarm signal configuration, please consult Santak’s agent.

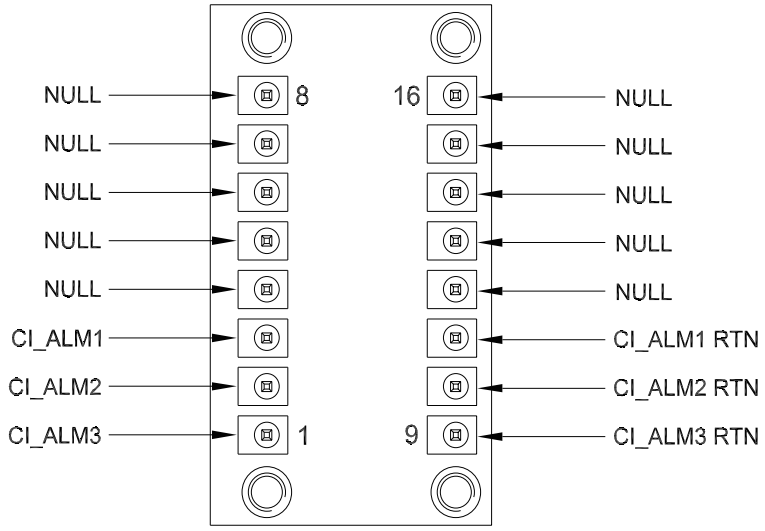

CN12

Copyright © 2025 Santak Corporation plc. All rights reserved.

5.1. Mini-slots

Santak 3C3 HD 20-80K has two Mini-slot communication expansion slots. The Mini-slots matching the UPS are as follows:

- **Gigabit Network Card**

The second-generation Gigabit Network Card is the new generation network communication card for connecting the UPS with Ethernet and Internet. The new generation network communication card has many novel features. The remarkably increased network communication speed and the confidentiality protocol can provide emergency power off, data saving and other services to authorized IT personnel.

Figure 5-2: Gigabit Network Card

- **Environmental Monitoring Probe generation 2 (EMPG2)**

The second-generation ambient temperature probe used together with the “Gigabit Network Card” and “Industrial Gateway Card” supports series connection of four in a maximum length of 50 meters. Meanwhile, it also detects the ambient temperature and humidity. It can be easily mounted by magnets and provides 2 additional digital inputs. Warning limits for temperature and humidity can be configured in the network card and monitored in a real-time manner with IPM and IPP software. Temperature compensation for lead-acid battery can be achieved as well.

Figure 5-3: Second-generation Environmental Monitoring Probe

Copyright © 2025 Santak Corporation plc. All rights reserved.

- **Industrial Gateway Card**

Industrial Gateway Card is integrated with many functions of SNMP card, for example, the functions of SNMP agent, HTTP/Web server, and Modbus card. Combined with Building Management System (BMS), it can provide continuous, reliable and accurate remote monitoring service to the UPS system. The user can define remote power-off, uninstallation and other tasks, and receive the system alerts from the UPS in real-time and remotely.

Figure 5-4: Industrial Gateway Card

- **Standard AS400/RS232 card**

This card provides 2 types of interface through one DB9 port. In dry node mode, the UPS information is transferred to the alarm system, PLC or computer system simply through the contact of the dry node relay. The information sent under standard settings include normal operation signal, bypass mode signal, battery mode signal, AC mains mode signal, and low battery signal. In RS232 mode, a RS232 interface connecting to the personal computer or UPS control display is provided. A jumper is used to select the interface (dry contact or RS232).

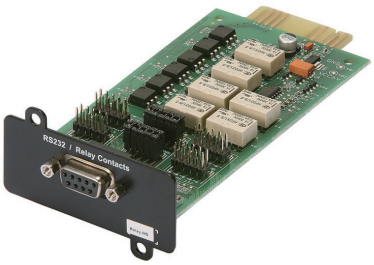

Figure 5-5: Standard AS400/RS232 card

Copyright © 2025 Santak Corporation plc. All rights reserved.

5.2. Intelligent Power Manager (IPM) Software

The Intelligent Power Manager (IPM) software is a specialized software for power management system. IPM can perform remote monitoring and manage the UPS. IPM allows the user to check the power equipment within an international enterprise through a PC. The software supports monitoring of single and multiple (if web-based) Santak UPS systems or other brands, intelligent power distribution units (ePDUs), other power and environment devices, and supports virtual environments.

5.3. Signal input Monitoring

You can use this function to connect input signals such as smoke detector or overheat alarm to the UPS. The user interface terminals for external connections are inside the UPS. Twisted-pair cables shall be used for connection.

The name of the signal input can be configured to display the alarms of functional names on the screen.

CAUTION

Attention: Do not operate the contact at any voltage above 30VAC (RMS) or 30VDC, or at any current above 5A.

Copyright © 2025 Santak Corporation plc. All rights reserved.

Chapter 6 UPS OPERATING INSTRUCTIONS

This section will introduce how to use the color touch screen to operate the UPS.

See Section 6.1 or Section 6.2 for the relevant information.

NOTE

- **Before UPS startup, please make sure that all installation work has been completed, and that the initial startup has been performed by Santak's customer service engineers. Before the initial startup, check all electrical connections to ensure successful installation and normal operation of the system.**
- **Read this part of information in this manual before operating any control devices, and have a full understanding of UPS operations.**
- **The UPS can work at any of the following three rated voltages: 220/380,230/400 or 240/415VAC. Before UPS operation, confirm the rated voltage and frequency of the UPS via the Settings -> System Information on the screen. If the UPS has to work at other voltages or frequencies, please contact the nearest Santak office or the Santak authorized dealer.**
- **The UPS is not a measurement device. All measurements displayed are approximate values.**

6.1. UPS Control Panel and Indicator Lamps

This section introduces the control panel and indicator lamps of the UPS, which is used for controlling and monitoring the UPS operations. Shown in *Figure 6-1* are the UPS control panel and indicator lamps.

6.1.1. Control Panel

The control panel is used to set up and control the UPS, and to monitor UPS operation. For a description of the UPS control panel functions, see Section *6.2*.

Copyright © 2025 Santak Corporation plc. All rights reserved.

The picture takes a 80kW cabinet as an example

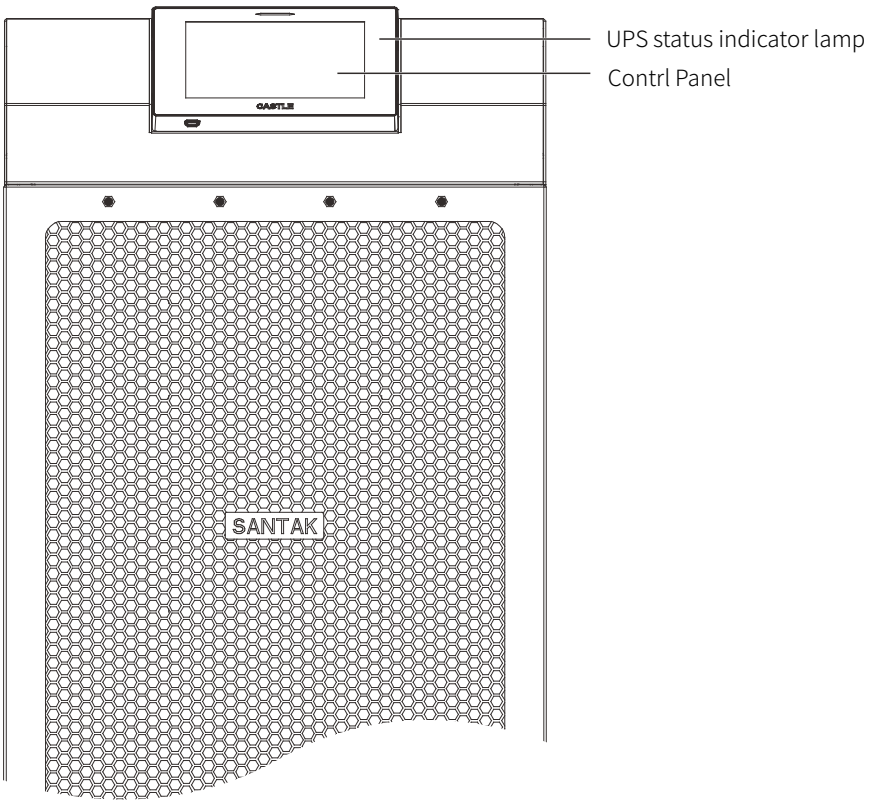

Figure 6-1: UPS Controls and Indicators

Copyright © 2025 Santak Corporation plc. All rights reserved.

6.2. Use of LCD Control Panel

6.2.1. Status indicator lamps

The four symbols on the left side of the control panel are status indicator lamps, which are color LED lamps and capable of functioning with the alarm speaker to inform you of the working status of the UPS.

Table 6-1: Status indicator lamps

LED Indicator	Status	Description
	Normally on	When in “Online” mode, the UPS is in normal operation, and the power module supplies power to the critical load.
Green Symbol —Normal Mode		
	Normally on	The UPS is in “Battery” mode. As “Battery” mode is a normal status of the UPS, “Normal ” indicator lamp is lit.
Yellow Symbol —Battery Mode		
	Normally on	TThe UPS is in “Bypass” mode, the critical load is borne by the bypass source. When the system is in “Bypass” mode, the “Normal” indicator lamp is not on.
Yellow Symbol —Bypass Mode		
	Normally on	The UPS has an active alarm which draws immediate attention, and the current active alarm is displayed on the HMI. The “Alarm” indicator lamp can be lit together with other indicator lamps.
Red - Alarm		

6.2.2. System logs

When the UPS system is operating in “Normal” mode, it performs monitoring on itself and the AC mains supply constantly. The system logs can be prompted by the buzzer on the UPS, the status indicator lamps or the Home screen.

- Upon a click on the location for displaying the alarm information, you will enter the current log interface, which displays the alarms, notices and commands in relation to all the current activities. Please see Section *6.2.3* for the details about use of the log interface.
- Buzzer: The system event buzzer can generate sounds to remind the operator what is happening, and emit a sound when an alarm is given. The buzzer will become silent when the alarm is cleared.
- System status indicator lamps: The status indicator lamps on the UPS control panel inform the operator of the current status of the UPS in the form of lights, similar to the event buzzer

Copyright © 2025 Santak Corporation plc. All rights reserved.

in function. When the UPS system is operating in normal mode, only the “Normal” indicator lamp is lit. If any other indicator lamp is on, it means that an alarm or event has occurred. When an alarm is given, check these indicator lamps first to identify what type of event has occurred. For the details of the status indicator lamps, please see Section *6.2.1* “Status indicator lamps”.

6.2.3. Use of touch screen

The LCD on the control panel provides an operating interface for the UPS system. In *Figure 6-2*, the display areas are indicated. Those areas will be discussed in the following sections.

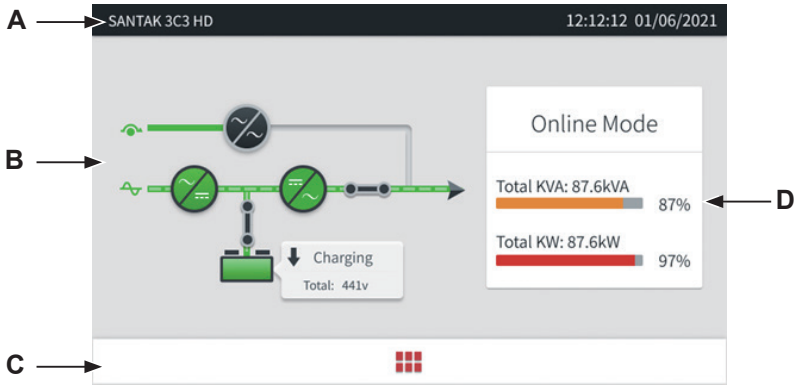

Figure 6-2: Components of the touch screen (Home interface)

A. In the UPS status area, the model of the Santak equipment, current date, time, and active log information are displayed.

B. The area for the energy flow diagram also shows information about the energy flow diagram of the UPS and the operation.

C. Upon a click on the menu, you can enter the menu interface to check for more UPS information.

D. The Meters data area displays the current operating mode of the UPS, total kVA and kW, and their respective percentages. Click this area to view the detailed three-phase data.

6.2.4. Use menu

Upon a click on the “ ” at the lower part of the Home page, the menu interface will appear, as shown in *Figure 6-3*. Shown in *Table 6-2* is the basic structure of the menu.

Copyright © 2025 Santak Corporation plc. All rights reserved.

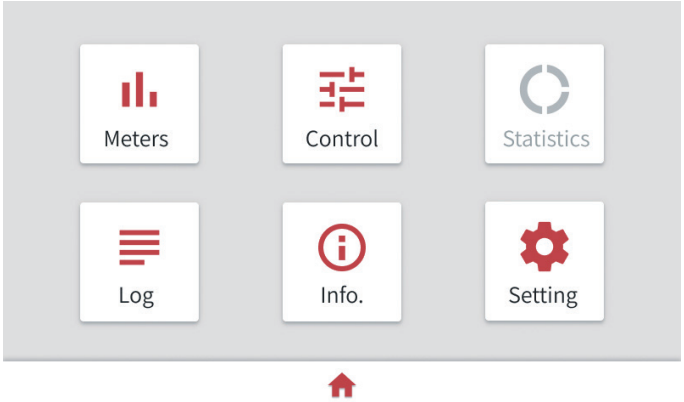

Figure 6-3: Menu interface

Table 6-2: Options displayed on the menu

Menu	Option description
Meters	Display the measurements of the system or critical load.
Control	Access various system control screens.
Statistics	Access and view the specific operating values of the system. Such operations shall be performed by authorized service engineers only.
Log	Access the system logs, including alerts, notices and commands.
Info	Display the UPS and HMI information.
Settings	Access various screen control variables for system operation.

6.2.5. Meters

Click Meters on the menu to enter the Meters interface. Shown in *Table 6-3* is the menu structure of Meters. The Meters interfaces are shown from *Figure 6-4* to *Figure 6-7*

Table 6-3: Menu of Meters functions

Menu	Option description
Input	The “Input” screen displays the input voltage (per phase), input current (per phase), input power (per phase), and total frequency as well as total kVA, total kW, and power factor measurements of the AC mains.
Output	The “Output” screen displays the output voltage (per phase), output current (per phase), output power (per phase), and total frequency, as well as total kVA, total kW, and power factor measurements of the AC mains.
Bypass	The “Bypass” screen displays the bypass input voltage (phase voltage), input current (per phase), input power (per phase), and total frequency as well as total kVA, total kW, and power factor measurements of the bypass.
Battery	The “Battery” screen displays the battery voltage, cell voltage, battery current, and more.

Copyright © 2025 Santak Corporation plc. All rights reserved.

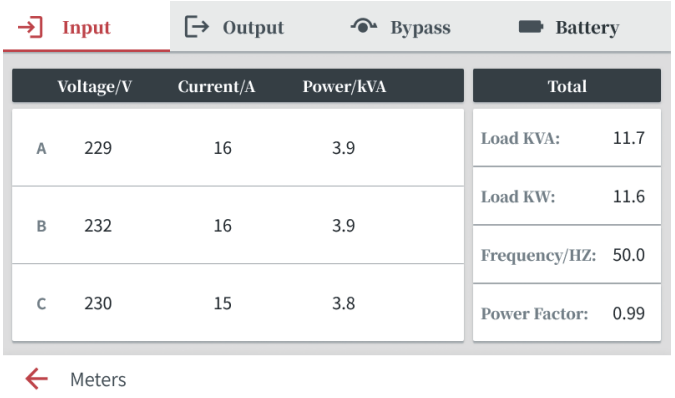

Figure 6-4: Input interface

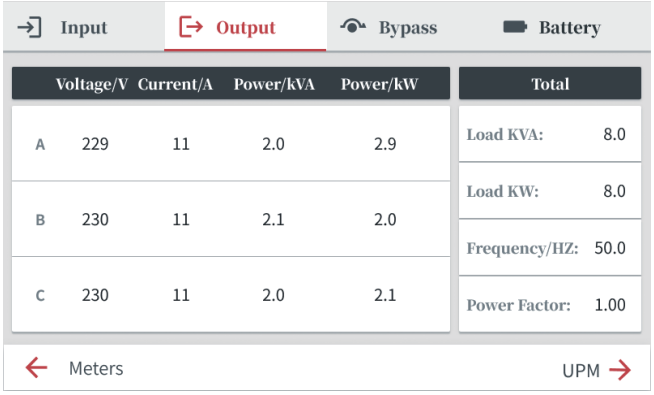

Figure 6-5: Output interface

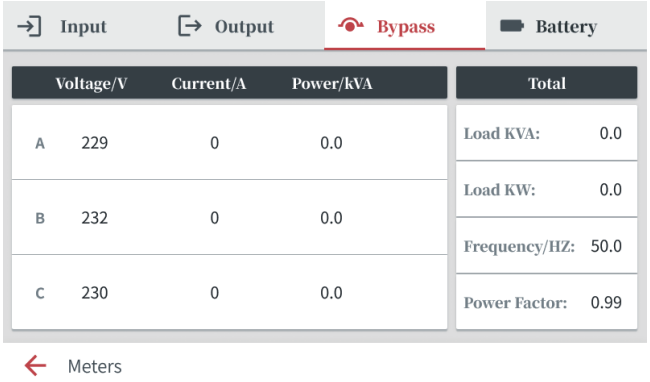

Figure 6-6: Bypass interface

Copyright © 2025 Santak Corporation plc. All rights reserved.

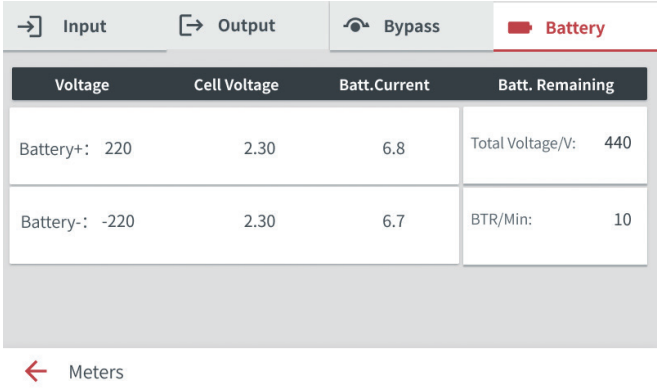

Figure 6-7: Battery interface

6.2.6. System Control Instructions

Click the Control button on the menu interface, enter the initial control password “1111” and click “OK”. When the password is verified, click “Next” to enter the Control interface, as shown in *Figure 6-8*. The structure of Control menu is shown in *Figure 6-4*.

Table 6-4: Structure of Control menu

Menu	Option description
System	On the “System” screen, you can perform system-to-bypass switching, system startup, system shutdown, and ECO enabling operations. In the upper part of the interface, you can view the UPS status and battery status.
UPS	On the “UPS” screen, you can perform battery test, turn on the battery charger, turn off the battery charger, turn on a single UPS, or turn off a single UPS. In the upper part of the interface, you can view the UPS status and battery status.
UPM	On “UPM” screen, you can view UPM status, UPS status, and battery status; or shut down the UPM.

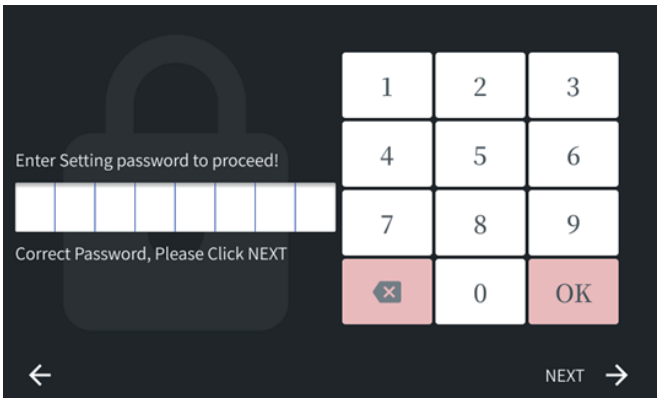

Figure 6-8: Password verification interface

Copyright © 2025 Santak Corporation plc. All rights reserved.

On the system control interface, you can switch to bypass mode, start up the system, shut down the system, enable ECO, or disable ECO disable. When the button is gray, it indicates that this button is currently null. On the top of the interface, you can view the UPS status and battery status.

Method for switching the system to bypass mode:

When the “Enter Bypass Mode” button is not in gray, you can switch to bypass.

- Click “Enter Bypass Mode” button to switch to the bypass interface, as shown in *Figure 6-9*.
- Click “Switch to Bypass” button on this interface, as shown in *Figure 6-10*.
- Click “OK” button to switch to the bypass mode, as shown in *Figure 6-10*. It is the same for other button functions.

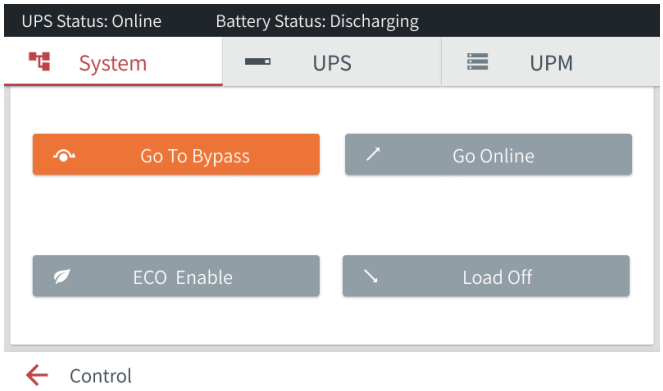

Figure 6-9: System interface

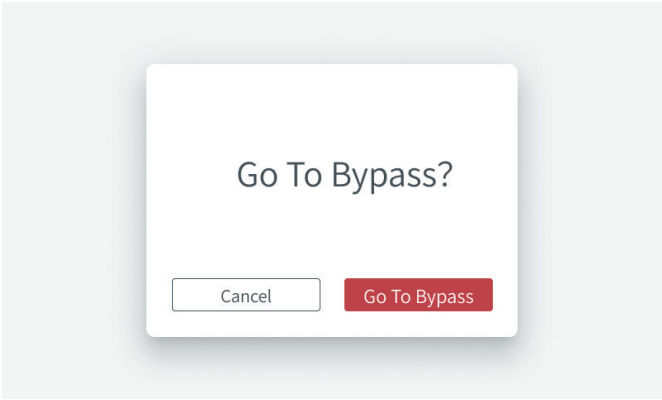

Figure 6-10: Switch to bypass interface

Copyright © 2025 Santak Corporation plc. All rights reserved.

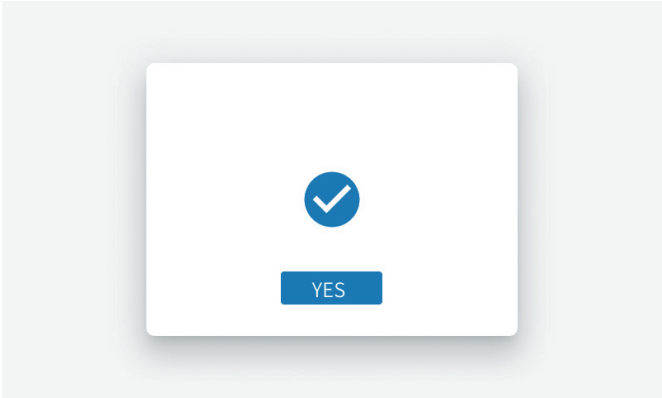

Figure 6-11: Confirmation interface

On the UPS control interface, you can test the battery, turn on a single UPS, shut down a single UPS, turn on the battery charger, or turn off the battery charger. When the button is gray, it indicates that this button is currently null. On the top of the interface, you can view the UPS status and battery status.

If there is only one UPS in the system, the shutdown button on the interface will be disabled, and the single-UPS shutdown button will be enabled. For the operating methods of the function buttons on this interface, please refer to the method for switching to the bypass mode.

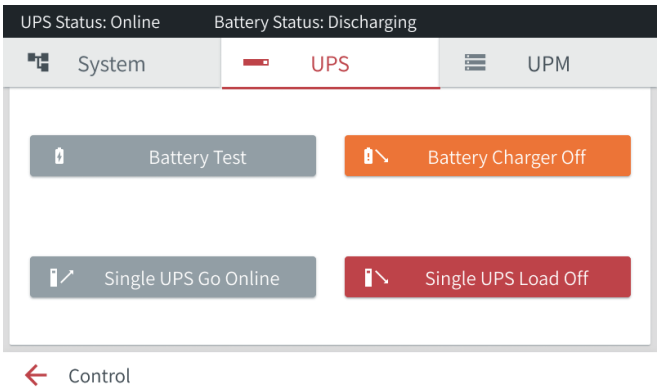

Figure 6-12: UPS interface

On the UPM control interface, you can view the UPS status, battery status, and UPM status, as shown in *Figure 6-13*. Click on the interface > to enter the UPM shutdown interface, as shown in *Figure 6-14*. When the button is gray, it indicates that this button is currently null. The UPM will be shut down upon a click of the “Shutdown” button on the interface.

Copyright © 2025 Santak Corporation plc. All rights reserved.

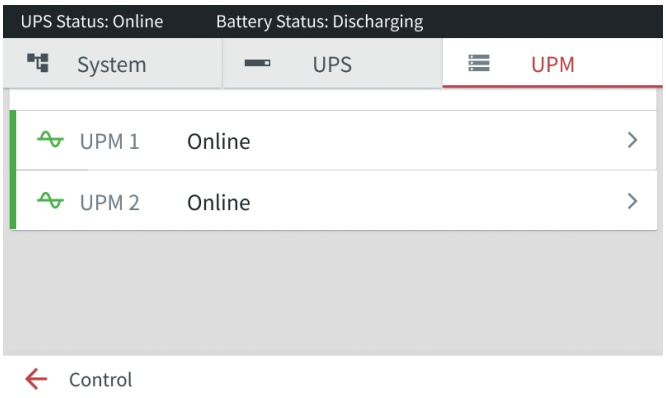

Figure 6-13: UPM interface

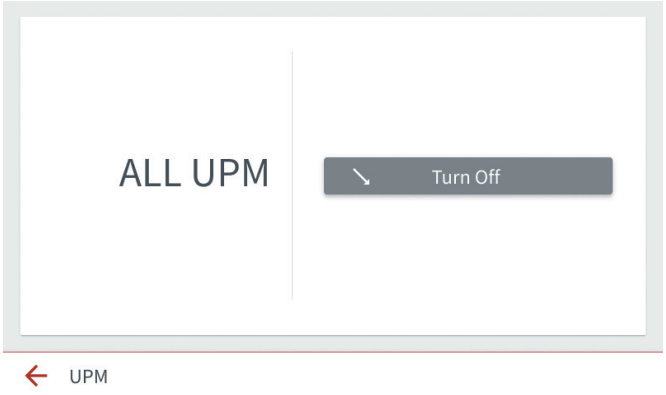

Figure 6-14: UPM shutdown interface

6.2.7. Use of Log menu

Click Log button on the menu to enter the Log interface, as shown in *Figure 6-15*. Shown in *Table 6-5* is the structure of Log menu.

Table 6-5: Structure of Log menu

Menu	Option description
Active Log	On the “Active Log” screen, you can view all the alert information of the current UPS.
History Log	On the “History Log” screen, you can view all active logs, 1,024 items on 205 pages at most.
Clear Log	On the “Clear Log” screen, you can clear all the alert information on the “Active Log” interface.

Copyright © 2025 Santak Corporation plc. All rights reserved.

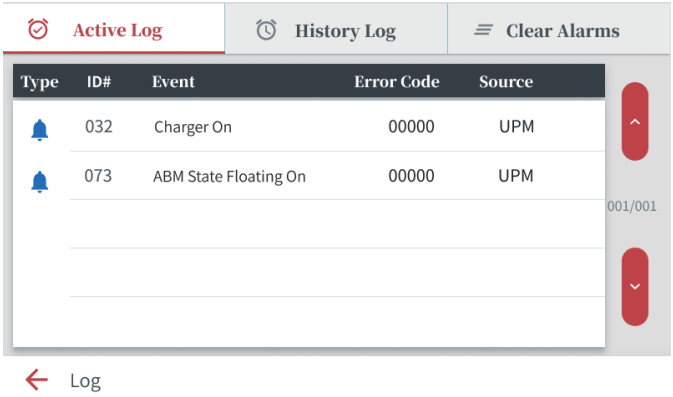

Figure 6-15: Active Log interface

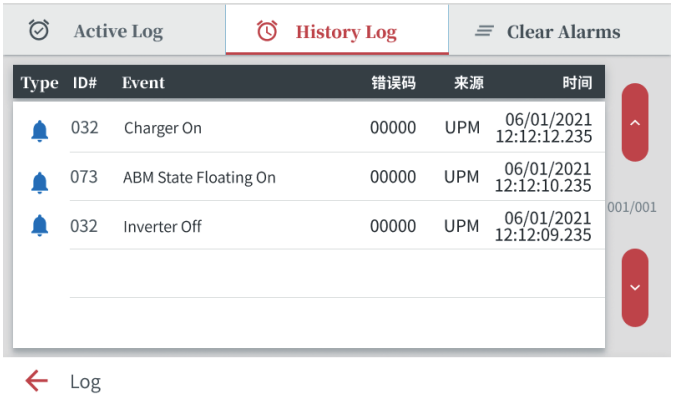

Figure 6-16: History Log interface

Click “Clear All Active Logs” button on the interface, then all active logs will be removed.

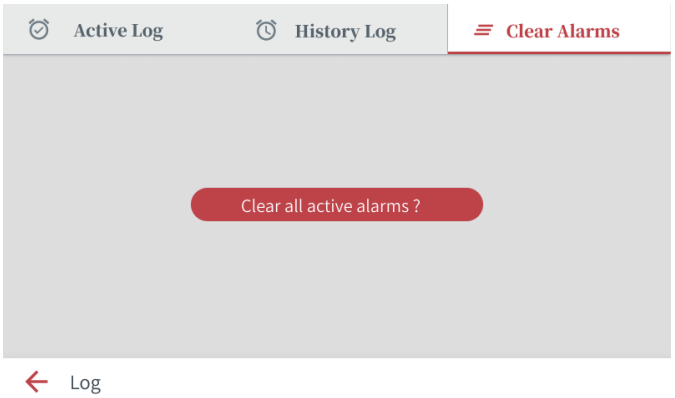

Figure 6-17: Clear Log interface

Copyright © 2025 Santak Corporation plc. All rights reserved.

6.2.8. Use of Info. menu

Click the Info. button on the menu to enter the Info. interface. On the Info. interface, you can view the UPS name, serial No., UPM version, HMI version, and other information. The interfaces of Info. are shown in *Figure 6-18* and *Figure 6-19*:

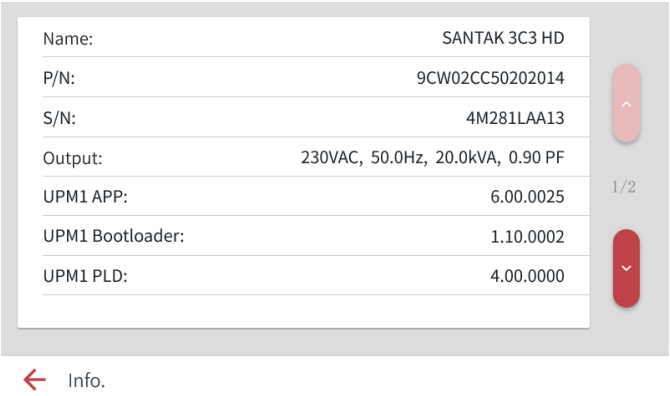

Figure 6-18: Info. interface 1

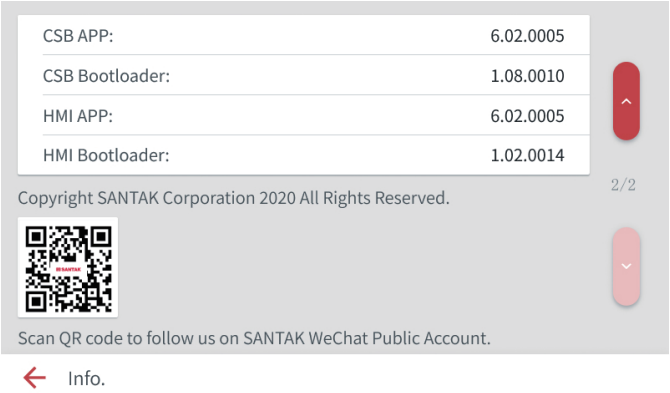

Figure 6-19: Info. interface 2

6.2.9. Use of Setting menu

Click the Setting button on the menu, enter the initial password “0101” and click “OK”. When the password is verified, click “Next” to enter the Setting interface. On the Setting interface, you can not only set the language, time, brightness, output voltage and frequency, but also modify the password:

Copyright © 2025 Santak Corporation plc. All rights reserved.

Table 6-6: Structure of Setting menu

Menu	Option description
General	On the “General” interface, you can set the HMI display language, date, time, brightness, buzzer enabling/disabling, and service reminder.
Meters	On the “Meters” interface, you can set the UPS measurements.
Output	On the “Output” interface, you can set the UPS output voltage and frequency.
Lamp Test	On the “Lamp Test” interface, you can check whether the four indicator lamps on the control panel are normal.
Password	On the “Password” interface, you can modify the control password and set the password.

Password level	Option description
Control password	The initial password is “1111”, which can be used to enter the control interface.
Setting password	The initial password is “0101”, which can be used to enter the Setting interface.

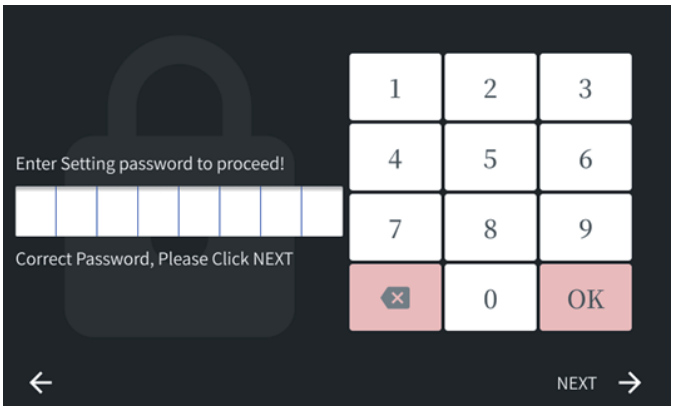

Figure 6-20: Password verification setting interface

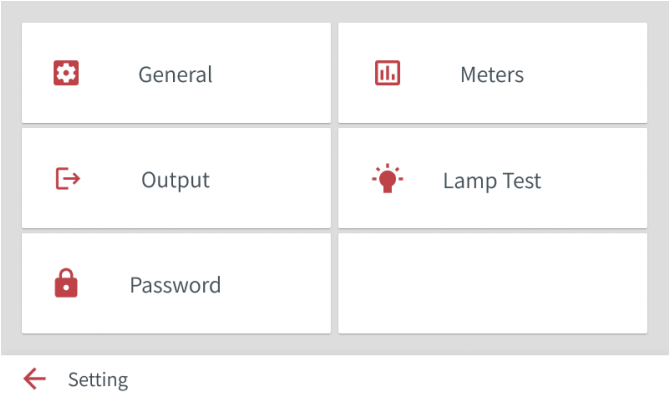

Figure 6-21: Setting interface

Copyright © 2025 Santak Corporation plc. All rights reserved.

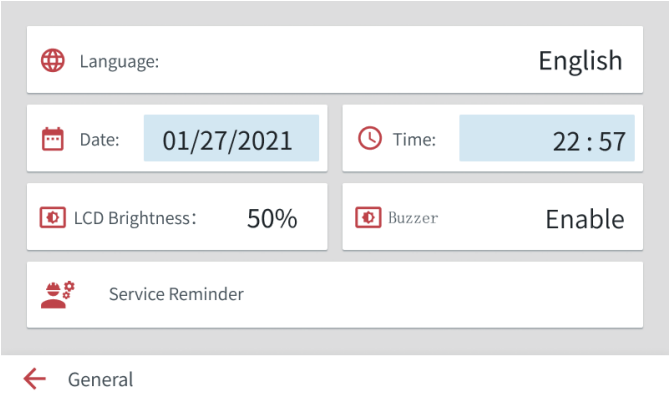

Figure 6-22: Setting - General interface

Click the Time button on the general interface to set the hour, minute and second. As shown in the figure below, save the time settings by clicking the Save button. Click the Cancel button to return to the “General” interface.

The method can be used to set other parameters.

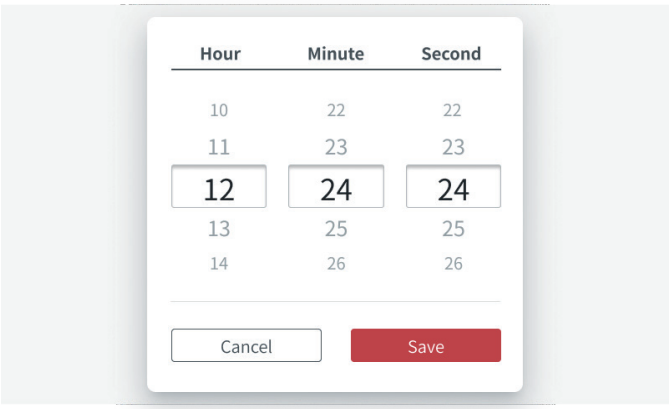

Figure 6-23: Setting - General - Time interface

Copyright © 2025 Santak Corporation plc. All rights reserved.

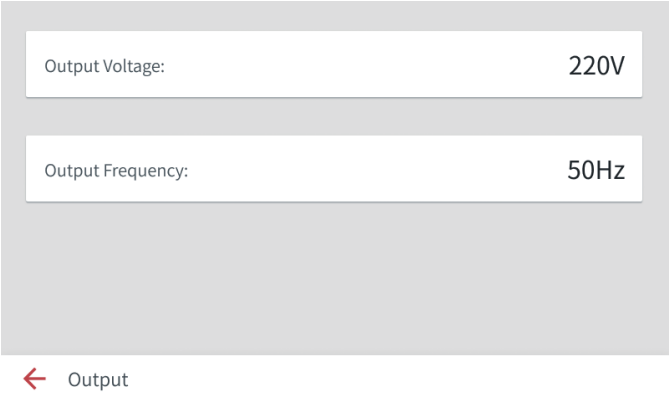

Figure 6-24: Setting - Output interface

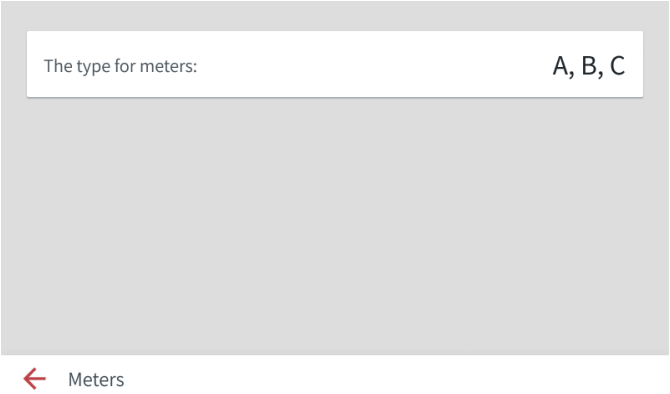

Figure 6-25: Setting - Meters interface

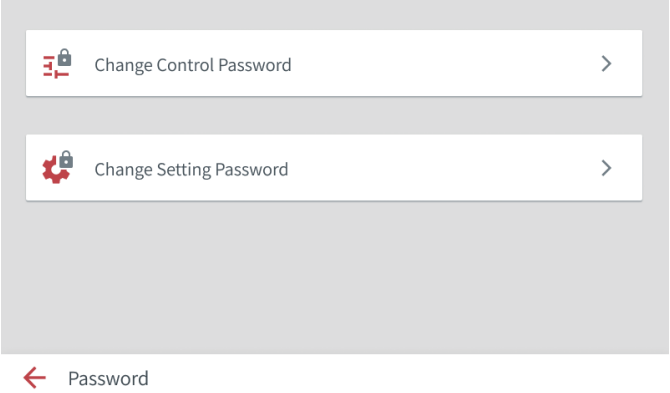

Figure 6-26: Setting - Password interface

Copyright © 2025 Santak Corporation plc. All rights reserved.

The control password modification interface is used to modify the password for entering the control interface. When the “Enable Control Password” button on this interface is clicked, the keyboard and password boxes for modifying the control password will appear, as shown in *Figure 6-28*. Then the control password can be modified.

Click the keyboard on the right side of the interface to enter the current password and the new password, then click the “OK” button on the keyboard. If the password is verified, “New password has been saved” will be prompted on the interface, as shown in *Figure 6-29*. If a wrong password is entered, “Wrong password” will be prompted on the interface, which means that you need to re-enter a password, as shown in *Figure 6-30*.

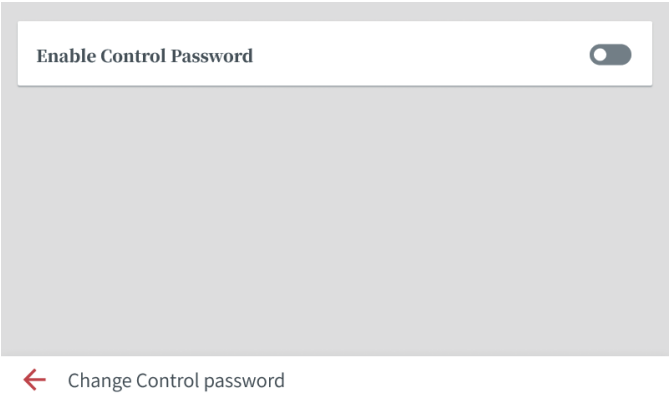

Figure 6-27: Control password modification interface

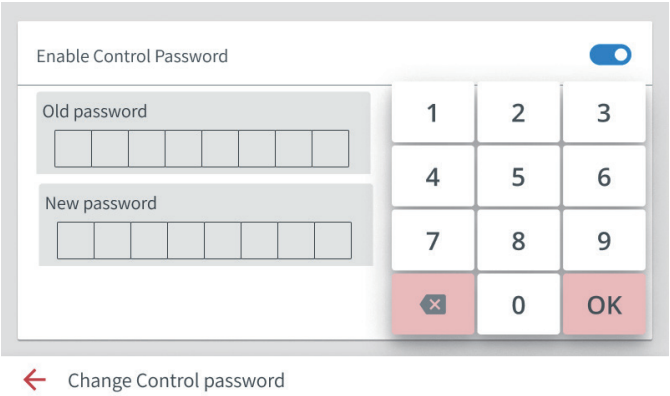

Figure 6-28: Control password modification interface

Copyright © 2025 Santak Corporation plc. All rights reserved.

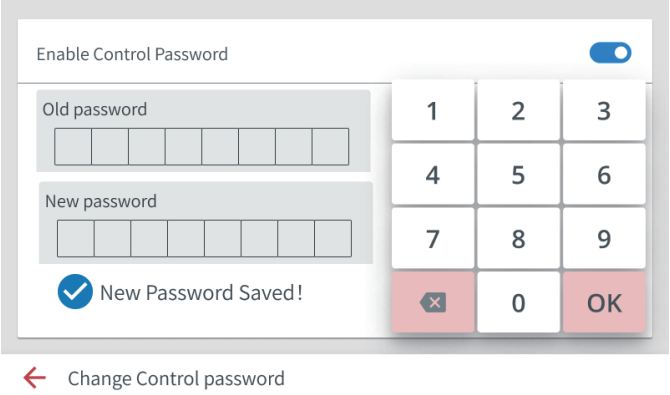

Figure 6-29: Control password modification interface

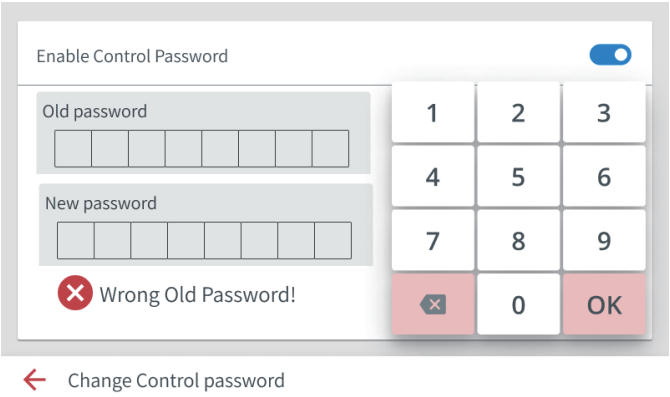

Figure 6-30: Control password modification interface

The Setting password modification interface is used to modify the password for accessing the Settings interface. The setting password can be modified in the interface as shown in *Figure 6-31*.

Click the keyboard on the right side of the interface to enter the current password and the new password, then click the “OK” button on the keyboard. If the password is verified, “New password has been saved” will be prompted on the interface; if the entered password is wrong, “Wrong password” will be prompted on the interface, which indicate you must re-enter a password.

Copyright © 2025 Santak Corporation plc. All rights reserved.

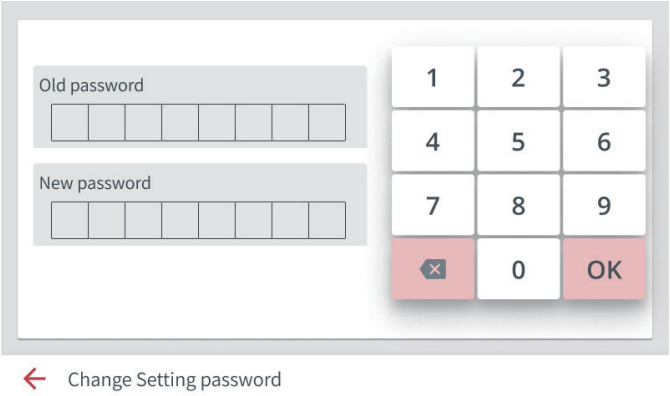

Figure 6-31: Setting password modification interface

6.2.10. Use of service reminder function

When a service expires, the “Service Maintenance Reminder” button will pop up on the Home interface, as shown in *Figure 6-32* .

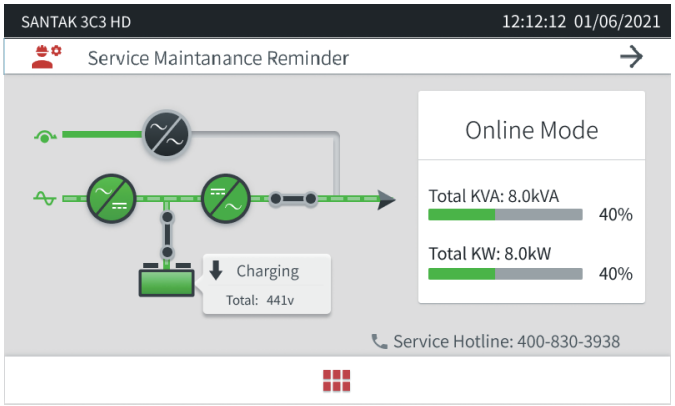

Figure 6-32: Service maintenance reminder interface

Service reminders include the following four types:

1. Preventive maintenance reminder 2. Battery replacement reminder 3. Capacitor replacement reminder 4. Fan replacement reminder.

Click the “Service Maintenance Reminder” button to enter the following interface. The prompts in red indicate that the reminders have expired. The prompts in gray means the reminder has not expired or the reminder has not been enabled.

If all the four service reminders have expired, click “Remind me in 6 months” or “Remind me in 1 month”, and then the four service reminders will be enabled again on the set date and time.

Click the “Learn more” button to see the detail tips.

Copyright © 2025 Santak Corporation plc. All rights reserved.

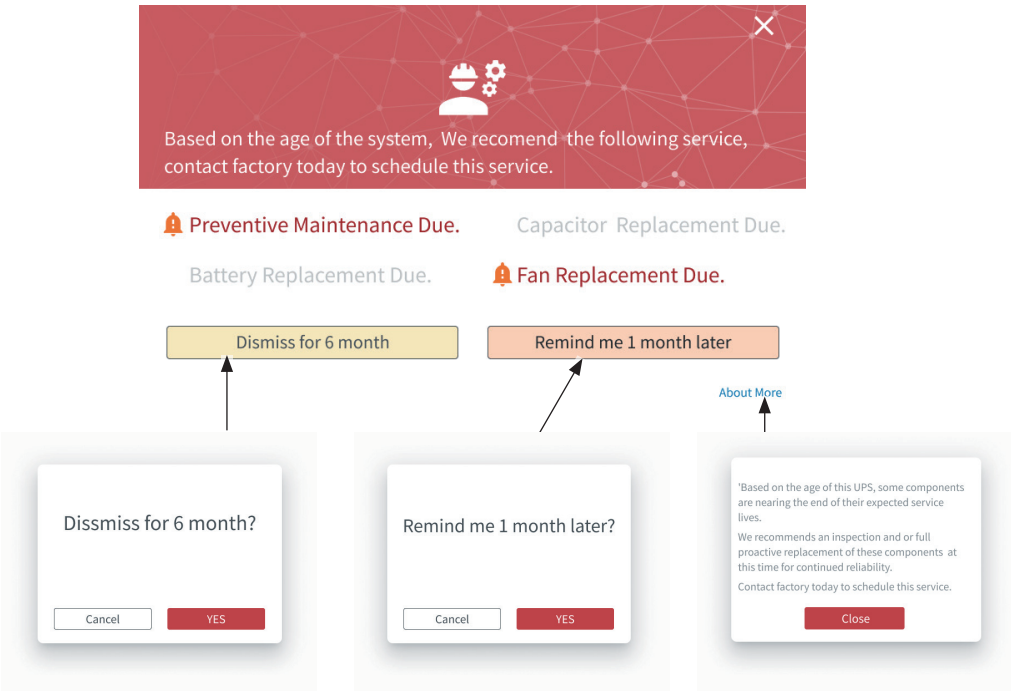

Figure 6-33: Service maintenance reminder setting interface

The service reminder can be set on the submenu under General, as shown in *Figure 6-21*.

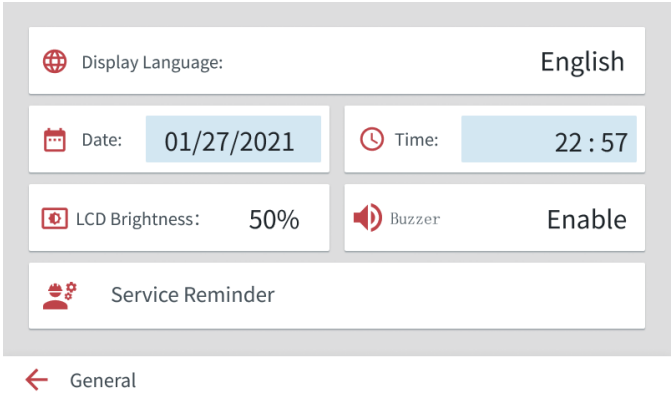

Figure 6-34: Location of service reminder function

Copyright © 2025 Santak Corporation plc. All rights reserved.

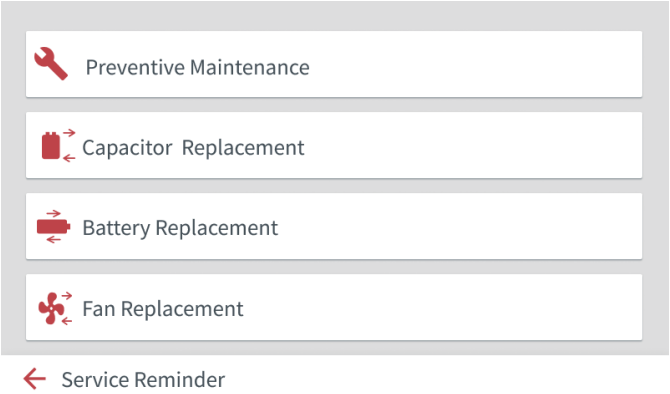

Figure 6-35: Service reminder settings page

Click the “Fan Replacement Reminder” button to enter the following interface, where you can set the time interval of the service reminder and enable/disable the service reminder. If disabled, the reminder will not be displayed when it expires, and the timing will not be reset. If enabled, the reminder will be actuated when the set time expires. When the setting is completed and the “Save” button is clicked, the reminder date and enable/disable status will appear on the interface.

The operation method is the same for the other three service reminder pages.

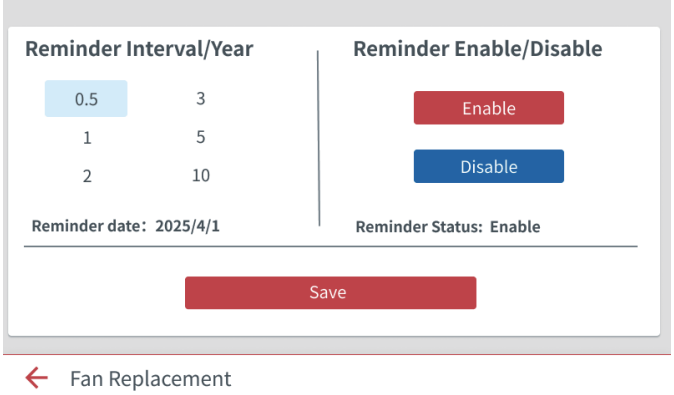

Figure 6-36: Fan replacement reminder settings

Copyright © 2025 Santak Corporation plc. All rights reserved.

6.3. System operation

NOTE

Please see Section *4.4* for the information about external battery case installation.

6.3.1. Start the UPS in "Online" mode (default mode)

The UPS system may be composed of a single UPS unit or a plurality of UPS units connected in parallel.

Start the UPS system:

1. Check and ensure that the rectifier input switch, the output switch and the bypass switch are closed, and that the maintenance bypass switch is open.
2. Close the external input distribution switch.
3. Close the external bypass distribution switch.
4. Observe the logic power supply indicated on the UPS control panel, and repeat steps 1-3 for each UPS in the system.
5. Make sure that there is no alarm.
6. Select the “Control” button on the menu, and press “OK” to start the system.
7. Select “System” on the control interface.
8. Click the “Start” button on the system interface, and press “OK” to start the system.
9. Press the “Start” button on the “System Control” page. If automatic bypass is enabled, the power will be supplied to the critical load via the bypass immediately, the UPS will run in bypass mode until the inverter is turned on, and the UPS will switch to online mode. If automatic bypass is disabled, the system will turn on the rectifier first, and then turn on the inverter when the rectifier turns normal. When the rectifier is normally turned on, the battery relay will be turned off automatically. It takes about 20 seconds for the UPS system to reach online mode.
10. At this point, the UPS is running in online mode, and all UPS status indicator lamps in the system indicate online mode.

6.3.2. Start the UPS in “Bypass” mode

If the UPS inverter output is unavailable and the critical load needs power supply, the following steps shall be performed:

CAUTION

When the UPS is in “Bypass” mode, the critical load is not protected if any bypass interruption or exception occurs.

1. Check and ensure that the rectifier input switch, the output switch and the bypass switch are

Copyright © 2025 Santak Corporation plc. All rights reserved.

closed, and that the maintenance bypass switch is open (if the UPS is equipped with such a switch), then close the front door.

2. Close the external input distribution switch.
3. Close the external bypass distribution switch.
4. Observe the logic power supply indicated on the UPS control panel, and repeat steps 1-3 for each UPS in the system.
5. Select “Control” on the menu, and enter the password to access the control interface.
6. Select “System” on the control interface.
7. Click the “Enter Bypass Mode” button on the system interface, and press “OK” to switch to bypass operations.
8. At this moment, the UPS works in bypass mode, and the bypass indicator lamp is lit.

6.3.3. Switch from “Online” mode to “Bypass” mode

Switch the load to the “Bypass” mode by performing the following steps:

CAUTION

When the UPS is in “Bypass” mode, the critical load is not protected if any bypass interruption or exception occurs.

1. Click the “Control” button on the main page to switch to the “System Control” page.
2. Press the “Switch to Bypass” button on the “System Control” page. If bypass is unavailable, the control unit will continue operation and sound an alarm. Otherwise, the bypass power will be supplied to the critical load immediately.
3. The system works in bypass mode, and the bypass indicator lamp is lit. The UPS is at “Ready” status, and the system is in “Bypass Mode”.

6.3.4. Switch from “Bypass” mode to “Online” mode

The critical load can switch to “Online” mode by performing the following steps:

1. Click the “Control” button on the main page to switch to the “System Control” page.
2. Press the “Start” button on the “System Control” page. If the loading capacity of the UPS is insufficient at this point, the system will remain in bypass mode, and the UPS will sound an alarm. Otherwise, the UPS system will switch to online mode.
3. At this point, the UPS works in online mode and the online status indicator lamp is lit, and the system status displayed is “Online Mode”.

Copyright © 2025 Santak Corporation plc. All rights reserved.

6.3.5. Switch from “Online” mode to “ECO” mode

Tip: "ECO" is displayed only if the Advanced Energy Saving Solution (EAA) mode feature is enabled by the facility or service personnel.

The load switches to ECO mode:

1. Select “Control” on the menu, and enter the password to access the control interface.
2. Click “System” on the control interface to switch to the system interface.
3. Click the “Enable ECO” button on the system interface, and press “OK” to confirm.
4. If no exception is detected, the UPS will switch to ECO mode when the battery is fully charged. If any exception is detected, the UPS will switch to the ECO mode when the exception is removed.

If the bypass is unavailable or the conditions for switching to the ECO mode are immature, the power module will continue operation, and the UPS will sound an alarm. Otherwise, the entire UPS system will switch to the ECO mode, and power will be supplied to the critical load from the bypass. The normal status indicator lamp will be lit, and the system status displayed is “UPS Online, ECO”. The UPS status is “Ready”.

6.3.6. Switch from “ECO” mode to “Online” mode

Tip: "ECO" is displayed only if the Advanced Energy Saving Solution (EAA) mode feature is enabled by the facility or service personnel.

The load switches to “Online” mode:

1. Select “Control” on the menu, and enter the password to access the control interface;
2. Click “System” on the control interface to switch to the system interface;
3. Click “Disable ECO” button on the system interface, and press “OK” to switch to the normal mode;
4. The normal status indicator lamp is lit.

If power module is unavailable, and the system remains at the bypass, the UPS will sound an alarm. Otherwise, the UPS system switches to battery mode and then to online mode. The online mode indicator lamp is lit, and the UPS status displayed is “Online Mode”. The UPS status is “In Service”.

6.3.7. System shutdown

For maintenance at the critical load, the following steps shall be performed for shutdown:

Perform UPS shutdown with the “LOAD OFF” command on the UPS control screen. The UPS “LOAD OFF” instruction enables the UPS to switch off all outputs.

UPS (including bypass) is at the shutdown status until it is restarted. Steps of performing “LOAD OFF”:

1. Select “Control” on the menu, and enter the password to access the control interface;

Copyright © 2025 Santak Corporation plc. All rights reserved.

2. Single-UPS mode: Click “UPS” on the control interface to switch to the UPS interface;
3. Click the “Single UPS Shutdown” button on the UPS interface, and press “OK” to confirm. When a prompt “Shutdown” appears, select to continue or cancel;

CAUTION

If “Yes” is selected, the UPS will switch off the output. This function is used only when you want to switch off the UPS output.

4. Select “Yes” or “No”, and press the return arrow;

The UPS will be shut down and the UPS output will be switched off upon a click on “Yes”. It will be canceled upon a click on “No”.

CAUTION

Do not restart the system after shutdown, unless the reason for shutdown is confirmed and the error is cleared.

5. Turn off the UPS input switch;
6. Turn off the UPS bypass input switch;
7. Turn off the UPS maintenance bypass switch;
8. Turn off the UPS input and bypass distribution switch;
9. If any external battery box is mounted, please turn off all battery switches (including battery N-wire switch).

WARNING

There is a power supply inside the UPS cabinet.

6.4. Single-UPS Operation

6.4.1. Single-UPS startup

Make sure the load does not exceed the capacity of a single UPS. The UPS system may be composed of a single UPS unit or a plurality of UPS units connected in parallel.

Start the UPS system:

1. Check and ensure that the rectifier input switch, the output switch and the bypass switch are closed, and that the maintenance bypass switch is open (if the UPS is equipped with such a switch), then close the front door;
2. Turn on the external input distribution switch;

Copyright © 2025 Santak Corporation plc. All rights reserved.

3. Turn on the external bypass distribution switch;
4. Observe the logic power supply indicated on the UPS control panel;
5. Make sure that there is no alarm;
6. Click “Control” on the menu, and enter the password to access the control page;
7. Select “System” on the control interface;
8. Click the “Start” button on the system interface, and press “OK” to start the system;
9. When the rectifier and inverter are started and the inverter voltage reaches the set value, “Online” status is displayed and the online indicator lamp (green) is lit;
10. At this point, the UPS is running in online mode, and all UPS status indicator lamps in the system indicate online mode.

6.4.2. UPS shutdown

Shutdown is allowed only when a single UPS is redundant in the system. Namely, shutdown is not allowed if the shutdown of a single UPS will cause system overload.

Shut down a single UPS:

1. Click the “Control” button on the main page to switch to the “System Control” page;
2. Press the “UPS Control” button on the “System Control” page;
3. Click “Shutdown” on the “UPS Control” page.

Start or shut down the battery charger

Please perform the following steps to start or shut down the battery charger:

1. Click the “Control” button on the main page to switch to the “System Control” page;
2. Press the “UPS Control” button on the “System Control” page;
3. Press “Charger On” or “Charger Off” on the “UPS Control” page.

Copyright © 2025 Santak Corporation plc. All rights reserved.

6.5. Use of Remote Emergency Power Off (REPO) Switch

Trigger UPS emergency power off by the “REPO” switch button. In emergency, this switch can be used to control the UPS output. The REPO switch can turn off the UPS and switch off the output without requiring confirmation.

CAUTION

The UPS will switch off the output when REPO switch is activated in the next step. This function can be used only when you decide to switch off the UPS output.

NOTE

Below are the instructions about REPO switch. In the case of REPO switch provided by the customer, the activation method might be different. Please see the operation instructions delivered together with the switch.

Steps to perform REPO switch operation:

1. Press the EPO button.

If confirmation is not requested, the regen contactors of the input, output and bypass will be disconnected, the battery will be switched off and the power module will be closed down immediately.

2. To restart the UPS after using the “REPO” button, please reset the “REPO” switch button first, then refer to Section *6.3.1* “Start the UPS in Online Mode” or Section *6.3.2*“Start the UPS in Bypass Mode”.

CAUTION

Do not restart the system after shutdown, unless the reason for shutdown is confirmed and the error is cleared.

Copyright © 2025 Santak Corporation plc. All rights reserved.

6.6. Transfer the UPS from Double Conversion Mode to Maintenance Bypass Mode

The operation of the internal MBS is allowed for trained personnel only who is familiar with the UPS behavior and functions. The full UPS wiring diagram with a MBS switch is presented in the installation instructions.

CAUTION

The integral MBS and Static Bypass need to supplied by the same source.

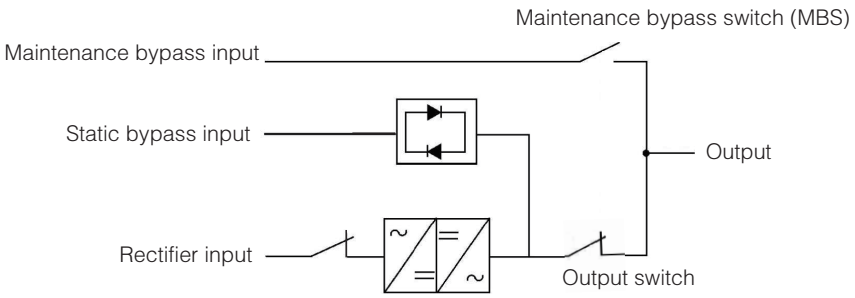

Figure 6-37: Switch status in online mode

1. In terms of switching from “Online Mode” to “Bypass Mode”, please see Section *6.3.3* Switch from “Online” mode to “Bypass” mode for the method;
2. Close the maintenance bypass switch;
3. Shut down the system by the method presented in Section *6.3.7* “System Shutdown”;
4. Open the input switch to cut off the UPS rectifier input;
5. Open the output switch to cut off the UPS inverter output;
6. Open the bypass switch to cut off the UPS bypass input;
7. Open the external battery switches (including battery N-wire switch).

UPS in “Maintenance Bypass Mode”

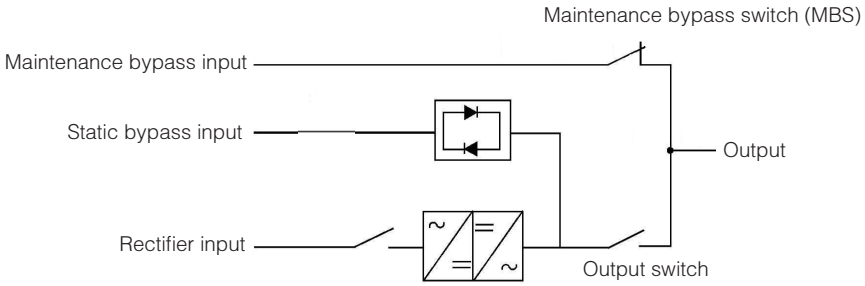

Figure 6-38: Switch status in maintenance bypass mode

Copyright © 2025 Santak Corporation plc. All rights reserved.

6.7. Switch from “Maintenance Bypass” Mode to “Online” Mode

Switch the UPS back to “Online Mode”

The initial position is normally as below:

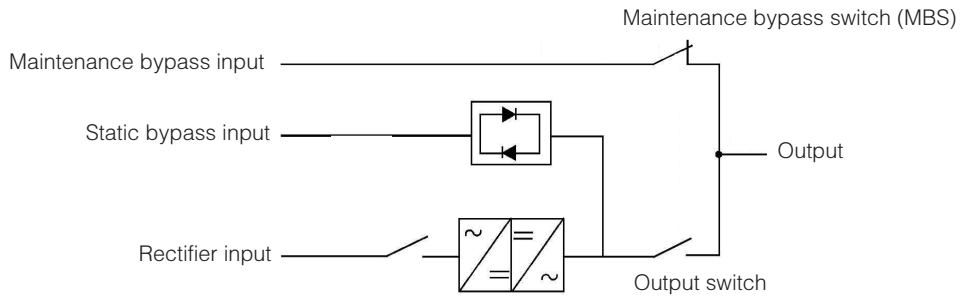

Figure 6-39: Switch status in Maintenance Bypass Mode

1. Close the input switch to turn on the UPS rectifier input;
2. Close the bypass switch to turn on the UPS bypass input;
3. Close the output switch to turn on the UPS inverter output;
4. Close the external battery switches (including battery N-wire);
5. Perform the UPS startup steps (bypass mode) by the method presented in Section *6.3.2* “Start the UPS in Bypass Mode”;
6. Open the maintenance bypass static switch to turn off the UPS (maintenance bypass switch) MBS output;
7. Switch the system from bypass mode to online mode by the method provided in Section *6.3.4*“Switch from Bypass Mode to Online Mode”.

UPS operation in “Online Mode”

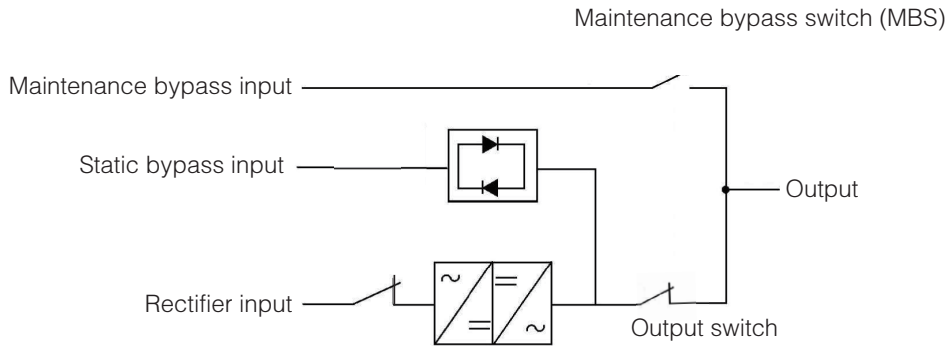

Figure 6-40: Switch status in online mode

Copyright © 2025 Santak Corporation plc. All rights reserved.

Chapter 7 UPS MAINTENANCE

The parts and components in the UPS cabinet are fixed on a rugged metal rack. All the parts and components are properly positioned to facilitate disassembly. In this way, the maintenance cost and time can be reduced.

To ensure normal operation of the UPS system, it's necessary to prepare a regular performance inspection plan. Regular routine operational inspection and system parameter inspection can effectively prevent faults and ensure long-term service of the equipment.

7.1. Important Safety Instructions

Notes: The UPS system can supply power to equipment even if the AC mains supply is interrupted. The inside of the UPS module is safe only when the DC power supply is disconnected and the electrolytic capacitors are discharged. After the interruption of AC mains supply and DC power supply, the maintenance personnel shall wait for at least 5 minutes until the capacitor is fully discharged before approaching the inner part of the UPS module.

WARNING

- **The maintenance shall be performed by Santak authorized service engineers.**
- **The voltage is lethal. Stop using the UPS when the cabinet door is opened or the protective plate is removed. Do not conjecture the energized status of any cabinet in the UPS system.**

As each battery string is an energy source itself. Do not touch any area inside a battery string, as there is always voltage in the battery string. If you suspect that a battery string needs repair, please contact the service representative.

Please observe the following rules when working on or around the battery:

- Remove any watch, ring, or other metal objects from your body.
- Use tools with an insulated handle.
- Wear insulated gloves and shoes.
- Do not put any tools or metal parts on the battery or battery case.
- Disconnect the charging power supply before connecting or disconnecting terminals.
- Check whether any battery is accidentally grounded. If any, remove the grounded power supply. An electric shock may be caused by touching any part of a grounded battery.
- For battery replacement, use batteries of the same type and specifications as those originally used in the UPS system.
- Dispose of used batteries properly. Refer to the local disposal regulations.
- Do not throw the battery into a fire, as it may explode.
- Do not disassemble or damage any battery. The released electrolyte may be toxic, which may harm the skin and eyes.

Copyright © 2025 Santak Corporation plc. All rights reserved.

7.2. Carry out Preventive Maintenance

The preventive maintenance of the UPS system is more convenient to carry out. It includes regular inspection and maintenance. It is advised that such work is performed by professional maintenance personnel of the manufacturer, so as to ensure that the equipment works normally and that the battery is in sound condition.

7.2.1. Daily Maintenance

Carry out the following work on a daily basis:

1. Check the surrounding area of the UPS system to ensure that the area is neat and in good order, and that the approach to the equipment is unobstructed;
2. Make sure the air inlet (breather vent in the front door) and the exhaust outlet (located in the rear part or top of the UPS cabinet) are unblocked;
3. Make sure the working environment comply with the parameters provided Section *3.2.1* Environmental and Installation precautions and *Chapter 8*"Technical Indicators of Product";
4. Make sure the UPS is in "Online" mode (the "Online" status indicator lamp is lit). Please contact your customer service representative if the alarm lamp is lit or the "Online" status indicator lamp is not on.

7.2.2. Monthly maintenance

Carry out the following work on a monthly basis:

1. Comply with the parameters of the monitoring system provided in Section *6.2* Use of control panel;
2. Check the air filter screen, and clean it or make replacement if necessary. Please see *Figure 7-1*and *Figure 7-2* for the specific locations. If you want to replace the filter screen, please contact your customer service representative. Steps of filter screen removal:

CAUTION

Work on energized circuit must be performed only by authorized personnel.

a. Remove the fastening screws on both sides of the UPS front panel (*Figure 7-1*, *Figure 7-2*).

b. Take out the front panel from the front side.

c. Remove the filter screen from the front panel and clean it, or replace it with a new one.

d. Install front plate and lock screws.

3. Log the results of the check and any corrections.

Copyright © 2025 Santak Corporation plc. All rights reserved.

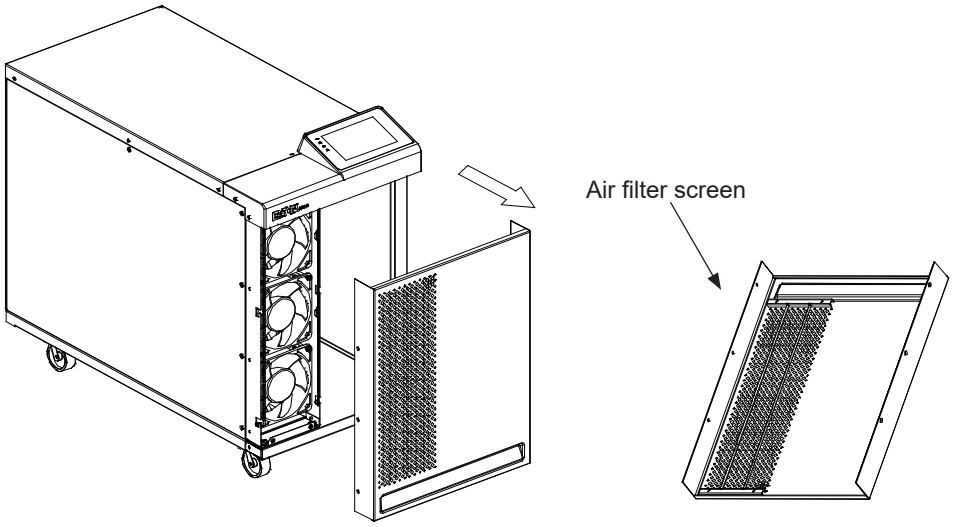

Figure 7-1: Location of 20–40k air filter screen

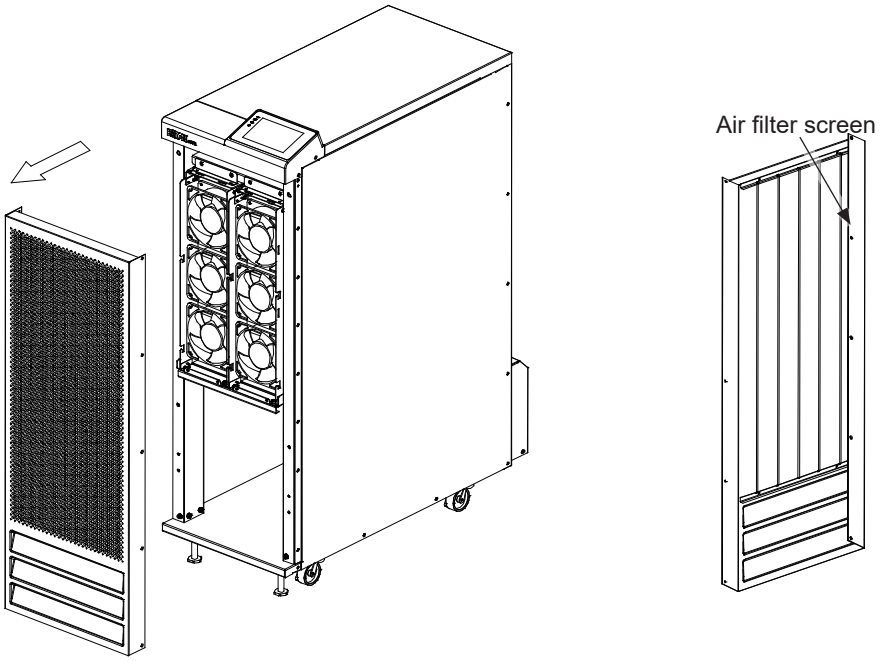

Figure 7-2: Location of 60–80k air filter screen

Copyright © 2025 Santak Corporation plc. All rights reserved.

7.2.3. Regular maintenance

Regular UPS inspection shall be carried out to confirm whether there is any overheating of parts, wiring and interface. Pay special attention to the wire crimping terminals, and fasten them during maintenance.

7.2.4. Annual maintenance

The annual preventive maintenance shall only be performed by Santak authorized service engineers who are familiar with UPS system maintenance. For more information about maintenance items, please contact your customer service representative.

7.2.5. Battery maintenance

For battery maintenance, please contact your customer service representative. Battery replacement and maintenance shall be performed by Santak authorized service engineers only.

7.3. Installation of Battery

NOTE

There is no DC disconnecter available inside the UPS.

Please install the battery per the manufacturer's instructions;

Recycle the used battery or UPS;

For proper disposal of battery, please contact your local recycling/reuse or hazardous waste recycling center.

WARNING

- **Do not throw the battery into a fire, as it may explode. The battery shall be properly disposed in accordance with the local laws and regulations.**
- **Do not disassemble or damage any battery. The released electrolyte may be toxic, and may harm your skin and eyes**
- **The battery might cause electric shock, burning (high short-circuit current) or fire. Please refer to relevant precautions.**

Copyright © 2025 Santak Corporation plc. All rights reserved.

CAUTION

- **Do not throw the UPS or UPS battery into the trash can. This product must be properly disposed, as it contains sealed lead-acid battery. Please contact your local waste recycling/ reuse or hazardous waste recycling center for detailed information.**
- **Do not throw electronic or electrical equipment (WEEE) into the trash can. For proper disposal of the waste, please contact your local recycling/reuse or hazardous waste recycling center.**

7.4. Maintenance Training

Santak provides basic training courses to help users grasp UPS operation knowledge and the method for preliminary corrective maintenance. Please contact the customer service representative for detailed information of training and other services.

Copyright © 2025 Santak Corporation plc. All rights reserved.

Chapter 8 TECHNICAL INDICATORS OF PRODUCT

8.1. Models

The UPS is placed inside an independent cabinet, and safety protection plates are provided at cable terminals. 50/60Hz frequency is optional for UPS systems with different rated output powers.

UPS models	Rated capacity	Frequency
3C3 HD-20k	20kVA	42/70 Hz
3C3 HD-30k	30kVA	42/70 Hz
3C3 HD-40k	40kVA	42/70 Hz
3C3 HD-60k	60kVA	42/70 Hz
3C3 HD-80k	80kVA	42/70 Hz

8.2. Technical Indicators

8.2.1. Standard

Safety	IEC 62040-1, IEC 60950-1
EMC, Emissions	IEC 62040-2 2016
EMC, electromagnetic suscep-tibility:	IEC 61000-2-2 (Low-frequency conducted) IEC 61000-4-2 (ESD) IEC 61000-4-3 (RF electromagnetic field) IEC 61000-4-4 (Electrical Fast Transient/Burst Immunity Test) IEC 61000-4-5 (Surge) IEC 61000-4-6 (Conducted RF common mode) IEC 61000-4-8 (Power frequency magnetic field) IEC 61000-4-11(Voltage dips and Voltage interruptions)
Performance & Tests	IEC 62040-3 2011
Environmental	IEC 62430
RoHS	2002/95/EC
WEEE	2002/96/EC
ECO Design Directive	2009/125/EC
Batteries	2006/66/EC
Packing:	94/62/EC

Copyright © 2025 Santak Corporation plc. All rights reserved.

8.2.2. UPS input

See the table below for details: Indicators of UPS input, output, environment and battery.

Rated input voltage	220/380 V; 230/400 V; 240/415 V
Voltage range (rectifier input)	190/330–276/478VAC (-15%, +20%), 100% load
	116/201–276/478VAC (-50%, +20%), 50% load
Voltage range (bypass input)	195/338–264/458VAC (default rated voltage range ±15%, max. selection range ±20%)
Rated input frequency	50 or 60 Hz, configurable
Frequency range	42-70Hz
Input phases (rectifier input)	3 phases + N
Input phases (bypass input)	3 phases + N
Input power factor	*> 0.99*
Rated input current	See Table 3-3: Rated current at rated power and voltage
Max. input current	
Distortion at rated input current, THDi	< 3 %

8.2.3. UPS output

Output phases	3 phases + N
Rated output voltage	220/380 V; 230/400 V; 240/415 V, configurable
Harmonic voltage distortion (THD)	100 % linear load <2 % 100 % non-linear load <5 %
Rated output frequency	50 or 60 Hz, configurable
Rated output frequency accuracy	± 0,1 Hz
Overload capacity	102–110% load 60min; 111–125% load 10min; 126–150% load 1min; >151% load 150ms.
Output current	See Table 3-3 : Rated current at rated power and voltage
Rated load power factor	1.0
Load power factor (allowed)	Lag 0.7 to lead 0.7

Copyright © 2025 Santak Corporation plc. All rights reserved.

8.2.4. Battery specifications

CAUTION! In case of connection with external battery, battery N wire must be included.

Battery type	VRLA, 12 Vdc
Battery voltage range	320V–607V
Charging configuration	ABM or float charge
Discharge end off voltage	1.67VPC
Charging current	Configurations: 20kVA max. 20A, configurable 30kVA max. 30A, configurable 40kVA max. 40A, configurable 60kVA max. 60A, configurable 80kVA max. 80A, configurable
Battery startup	Available
Battery environment	Discharging: -20˚C –+50˚C Charging: 0˚C –+40˚C Storage: -15˚C –+40˚C Recommended operating and storage temperature: +25 ˚C

8.2.5. Environment

Operating ambient temperature	0–40˚C , the recommended operating temperature is 25˚C ; the use shall be derated at 40–50˚C .
Storage ambient temperature	-25˚C –55˚C (-13 ˚F –131 ˚F) (placed in the protective packaging materials)
Operating altitude	The UPS works normally below the altitude of 1,000m (3,300ft). If you intend to use it at an altitude above 2,000m (6,600ft), please contact Santak for more information.
Relative humidity (storage and operating)	5%–95%, condensation free A difference of at least 1 Celsius degree (1.8 degrees Fahrenheit) shall be kept between the dry bulb temperature and wet bulb temperature of the hygroscope to avoid condensation.
Noise @1m	Within a distance of 1m: 20k: 61dB; 30k-40k: 66dB; 60k-80k: 68dB, per ISO 7779
EMC	Class: C3 (GB 7260.2 / IEC 62040-2)

Recommended storage environment and storage time of the overall equipment and spare parts:

- Equipment which cannot be installed and energized immediately shall be stored indoor, and in an environment that is clean and well ventilated and that the temperature and humidity are controlled. The storage area must be protected from rain, water, chemicals and the ambient gases provided in *Table 8-1*, and meet the requirements (see *Table 8-2*) on the transportation and storage environment for 1 year.

Copyright © 2025 Santak Corporation plc. All rights reserved.

- Please do not place the equipment in environment with extreme humidity and temperature changes, dust, dirt, rubbles, paint, conductive particles or corrosive gases.
- Do not remove the equipment packaging before installation.
- The contractor receiving the equipment shall be responsible for equipment protection during the storage period.
- The equipment must be stored on a solid level floor.
- Before the arrival of the equipment, an ambient temperature/humidity control plan shall be formulated.

This product is suitable to be installed and used in the G1 environment provided in ANSI/ISA-71.04-2013. Please see *Table 8-1* for the gas concentration limits of relevant gases.

Table 8-1: Gas concentrations recommended in Table B1 of ANSI/ISA-71.04-2013 for G1 equipment environment

Pollutants	Gases	Gas concentration/ppbv
Group A	H_2S	<3
	SO_2SO_3	<10
	Cl_2	<1
	NO_x	<50
Group B	HF	<1
	NH_3	<500
	O_3	<2

Table 8-2: Requirements on the environment for transportation and storage within 1 year

Environment for transportation and storage within 1 year (Subject to the production date on the label of equipment serial No.)	
Storage site	Indoor
Dust	Good
Storage temperature	< 40˚C
Storage humidity	< 70% RH
Others	Stored with initial packaging

If the actual storage conditions of the machine do not meet the above storage environment, re-evaluate the storage time according to the actual storage environment.

Copyright © 2025 Santak Corporation plc. All rights reserved.

Chapter 9 WARRANTY

The product is warranted against defects in materials and workmanship for a period of tthirty-six (36) months from its original date of purchase. The local office or distributor may grant a warranty period different to the above. Please refer to local terms of liability as defined in the supply contract.

The UPS manufacturer is not responsible for

- Any costs resulting from a failure if the installation, commissioning, repair, alternation, or ambient conditions of the equipment do not fulfil the requirements specified in the documentation delivered with the unit and other relevant documentation.
- Equipment subjected to misuse, negligence or accident.
- Equipment comprised of materials provided or designs stipulated by the purchaser.

The warranty is only valid if the installation inspection and initial start up of the UPS unit is carried out by a service engineer approved by Santak. Service and maintenance of the UPS shall also be performed only by a service engineer approved by Santak. Otherwise the warranty will be voided.

If the product fails to meet its published specifications due to a defect in material and workmanship, covered by this warranty, the seller will repair or replace the warranted product. Such repair or replacement will be made by Santak or by a service provider approved by Santak. Repair or replacement during the warranty period does not extend the original warranty. Warranty does not cover taxes, which will be due in connection with replacement or repair of the product.

Batteries are warranted against failures in material and workmanship, not against the normal aging and reduction of ampere-hour capacity. The product storage environment has to meet manufacturer's specifications, failure to do this will cause the warranty to be voided.

Under no circumstances shall the manufacturer, its suppliers or subcontractors be liable for special, indirect, incidental or consequential damages, losses or penalties.

The technical data, information and specifications are valid at the time of printing. The UPS manufacturer reserves the right to modifications without prior notice.

Copyright © 2025 Santak Corporation plc. All rights reserved.

Chapter 10 INSTALLATION CHECKLIST

Single Machine System Installation Checklist

- ❑ All packing materials and binding parts must be removed from the cabinet.
- ❑ The UPS cabinet must be placed in a proper location for installation. Do not place the UPS under the air outlet of the air conditioner.
- ❑ All conduits and cables shall be laid properly to the UPS and any other auxiliary cabinets.
- ❑ All power cables shall be in proper size and connected to the correct terminals.
- ❑ The neutral wire has been installed as required.
- ❑ The ground wire shall be properly installed.
- ❑ The positive, negative and neutral wires of the battery shall be correctly installed.
- ❑ The external alarm has been wired correctly. (Optional).
- ❑ The external battery switch is turned off.
- ❑ An alarm label has been attached to the external battery switch.
- ❑ LAN drops have been installed. (Optional).
- ❑ Connection to LAN has been completed. (Optional).
- ❑ The REPO equipment has been fixed at an appropriate location, and the wires have been connected to the corresponding terminals of the UPS correctly. (Optional).
- ❑ If a normally closed REPO switch is used in the UPS, the 3rd and 4th pins of the REPO terminal block shall be connected by jumpers.
- ❑ All terminal cover plates have been installed.
- ❑ Accessories are mounted in their installed locations and their wirings have already been connected within the UPS cabinet. (Optional).
- ❑ Fireproof mud shall be filled into gaps between the cables and the cabinetAdequate workspace exists around the UPS and other cabinets.
- ❑ The air-conditioning device has been installed and its operation is normal.
- ❑ The surrounding area of the UPS' installation site shall be clean and free of dust. (Santak recommends that the UPS is installed on a level floor suitable for computer or electronic equipment).
- ❑ There is adequate workspace around the UPS and other cabinets.
- ❑ Sufficient lighting is provided around all the UPS equipment.
- ❑ A 220 VAC power supply socket is available within 7.5m (25ft) around the UPS.
- ❑ The initial startup and operational inspection of the UPS or accessory case shall be performed by Santak authorized service engineers.

Copyright © 2025 Santak Corporation plc. All rights reserved.

Parallel System Installation Checklist

- ❑ Each cabinet in the UPS system must be placed in a proper location for installation. Do not place the UPS under the air outlet of the air conditioner.
- ❑ All conduits and cables must be properly routed to the UPS.
- ❑ All power cables shall be in proper size and connected to the correct terminals.
- ❑ The neutral line has been installed between cabinets as required.
- ❑ The ground wire shall be properly installed.
- ❑ The parallel wiring shall be correctly installed between the UPS units.
- ❑ The parallel wiring shall be correctly installed.
- ❑ Fireproof mud shall be filled into gaps between the cables and the cabinet.
- ❑ There is adequate workspace around the UPS and other cabinets.
- ❑ The startup and operational inspection of the parallel system or accessory case shall be performed by Santak authorized service engineers.
- ❑ The positive, negative and neutral wires of the battery shall be installed correctly and properly.
- ❑ The external battery switch is turned off.
- ❑ An alarm label has been attached to the external battery switch.

Copyright © 2025 Santak Corporation plc. All rights reserved.

Annex A: User Settings

Users can change the following configurations of the UPS. Select Settings on the main page. User Settings:

Table 10-1: User Settings

To modify the Config settings, you need to sign in.

Setting	Description
Information	UPS information, include material code and serial No.
About	Version information.
Clear	Clear alert logs.
Clear logs	Clear partial active logs.

Table 10-2: Configuration Settings

Setting	Description
Language	Change the language of user interface.
UPS name	Santak 3C3HD
Clock	Change the date and time, change the time format or enable 1 disabled NTP clock setting.
Screen saver interval	10min, non-configurable.
HMI backlight	Adjust the backlight brightness.
Configuration of “setting password”	The default password is 0101.
Configuration of “control password”	The default password is 1111.

Copyright © 2025 Santak Corporation plc. All rights reserved.

Annex B: Name and Content of Harmful Substances in Products

Name	Harmful substances					
	Lead (Pb)	Mercury (Hg)	Cadmium (Cd)	Hexavalent chromium (Cr(VI))	Polybrominated biphenyls (PBB)	Polybrominated diphenyl ethers (PBDE)
Batteries	×	○	○	○	○	○
Printed circuit assembly	×	○	○	○	○	○
Power cord outlet terminal	×	○	○	○	○	○
Box hardware	×	○	○	○	○	○
Switches/circuit breakers	○	○	×	○	○	○

This form is formulated according to SJ/T 11364.

×: indicates that the content of the harmful substance in every homogeneous material of the components is below the limit provided in GB/T 26572.

○: indicates that the content of the harmful substance in a certain homogeneous material of the components is beyond the limit provided in GB/T 26572.

Exemption clauses of environment-friendly use period: The specific environment-friendly use period is only in line with the corresponding laws and regulations of the People's Republic of China, and does not mean that our company provides guarantees or bears any obligations to customers. During the environment-friendly use period, it is assumed that the customer will use the product under normal conditions according to the User Manual. The environment-friendly use period of some combined parts (e.g., combined parts equipped with batteries) in this product might be shorter than that of this product.

Copyright © 2025 Santak Corporation plc. All rights reserved.