SANTAK

Santak Castle Series UPS

CASTLE 3C3 HD

300-600 kVA

CASTLE 3C3 HD 300-600K

3C3 HD 300-600K UPS is the new generation three phase tower UPS, which adopts the most advanced power electronics and digital signal control and protection technology. It performs higher efficiency, higher performance, and more convenient operation, and can provide users with high-quality power supply guarantee in various industries.

Typical application

- Medium and large data centers
- Computer data room
- Automatic control system
- Transportation
- Banking, finance
- Communication industry, 5G
- Manufacturing

Power range: 300/400/500/600kVA

Topology: Advanced three-level inverter, high-frequency IGBT conversion/ inversion technology

Input and output: 220V/380V three-phase four-wire

Frequency: 50/60 Hz

Product features

- Adopt the new generation of IGBT and optimized three-level inverter topology, with online efficiency up to 97% and ESS mode up to 99%
- Output power factor 1.0
- Internal modular design, MTTR<30 minutes
- Intelligent battery management function to extend battery life cycle
- 7 "color touch screen for easy operation
- Support lead-acid batteries, lithium batteries, super capacitors and other DC energy storage systems
- Maximum charging current up to 400A, faster recovery of battery capacity
- Support 4 UPS parallel and share common battery
- Support battery cold start
- Intelligent dummy load test function
- With internal module redundancy function, higher reliability
- Adopt oil-filled capacitor, maintenance-free and long service life

Internal power modular design, flexible tower UPS

The 3C3 HD series UPS adopts innovative internal modular design, which combines the flexibility of modular UPS and the high reliability of traditional tower UPS, making the 3C3 HD have the characteristics of high reliability and convenient maintenance.

- Internal modular design, easy maintenance, MTTR<30 minutes
- With redundancy function. Under low load condition, single power module failure does not affect the operation of the whole system
- Fixed installation power modules. Eliminate the potential trouble caused by power modules hot swapping of modular UPS and enhance the system's reliability.

1 Power modules

Each module power is 60kW, and includes rectifier and inverter.

2 Communication module

Communication module includes 3 smart card slots for optional dry contact, SNMP, Modbus, EMP and other communication cards.

3 Input and output switches (optional)

Input, output, bypass and maintenance bypass switch (MBS).

4 Static bypass switch

Built-in static bypass switch ensures uninterrupted power supply for users' load in case of emergency.

Extra Low TCO (Total Cost of Ownership)

3C3 HD 300-600K UPS efficiency is up to 97% at online double conversion mode and 99% at ESS mode.

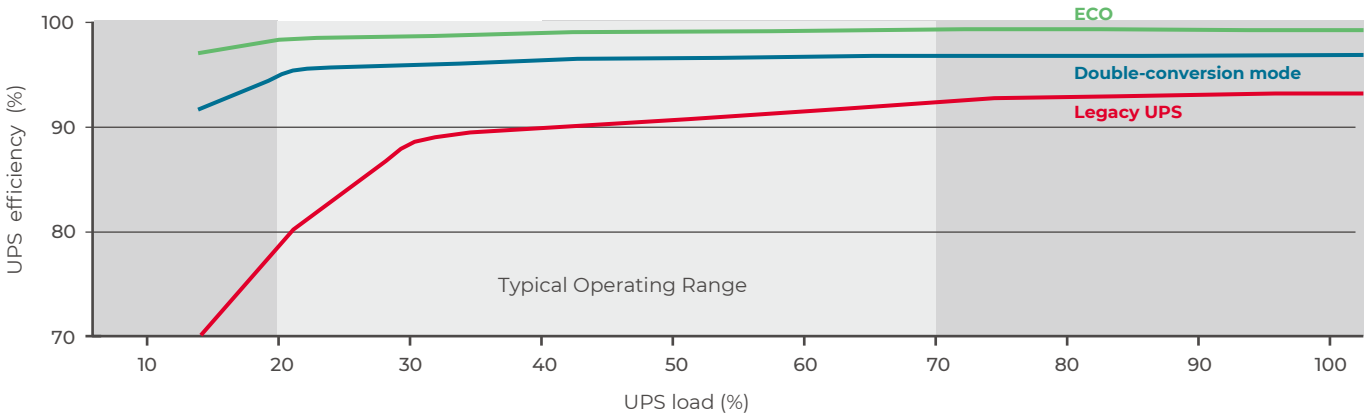

- ESS mode can provide up to 99% system efficiency, significantly reducing UPS power consumption and cooling power consumption
- In ESS mode, UPS built-in filter protection devices can still provide surge protection to ensure high-quality power output
- 3C3 HD can intelligently switch between ESS mode and double conversion mode automatically according to the quality of the power grid. The typical switching time is only 2-4ms
- In ESS mode, the reliability of key components is further improved and the service life is longer

Safe and reliable. Suitable for various application environments

Dustproof design

Santak 3C3 HD has a dust filter to isolate dust from the outside of UPS, improving the adaptability to the harsh environments. At the same time, the internal layout and airflow distribution are optimized, which greatly reduces the dust accumulation.

- Dust filter complying with American fire protection standard UL94 and dust filter standard UL900
- Easy to disassemble and clean. Low maintenance cost

PCBA coating

Short circuit caused by corrosion of PCBA is one of the important reasons for failure of UPS, especially in coastal cities. Santak 3C3 HD uses advanced intelligent PCBA coating technology to further improve the salt spray and corrosion resistance of the product.

- Full-automatic coating process to avoid manual operation error and ensure coating precision and consistency
- Blue-ray detection technology is used to ensure the coating quality

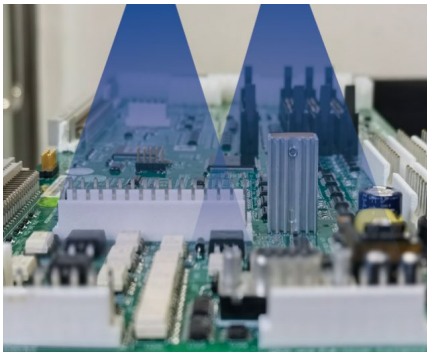

Oil-filled capacitor, long life and safer

Capacitors are key components in UPS operation and need regular inspection and maintenance. SANTAK 3C3 HD 300-600K innovatively use long-life, safer oil-filled capacitors to improve the reliability of UPS.

- Pass 85 °C/85% RH 2000 hour endurance test, with higher reliability
- Pass IEC61071/UL810 certification
- Automatically open circuit when overload, overheat or damage of the capacitors to avoid smoke or fire risk
- More than 10 years long life under rated load

Flexible application and convenient operation

Santak intelligent battery management

3C3 HD adopts Santak intelligent battery management technology. In addition to the traditional two-stage charging, it also has an intelligent rest mode to avoid the aging effect of the battery due to long-term floating charge. This technology can also accurately predict the working state of the battery, detect potential discharge faults in advance and give a warning.

- The first two-stage charging mode ensures that the battery is fully charged
- The third stage rest mode make the battery in the state of natural discharge. UPS detects the battery voltage in real time, and automatically starts the charger to enter a new charging cycle again when the battery voltage drops to the setting value
- Intelligent rest mode can extend battery life by up to 50%

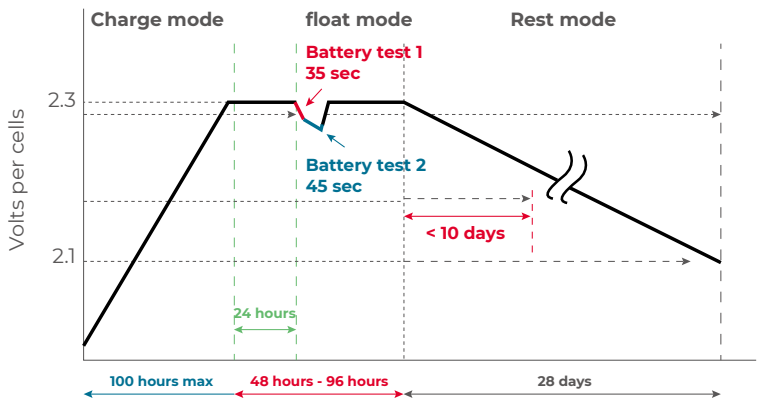

Compatible with lithium battery

Lithium battery has the characteristics of small size, light weight, high charge-discharge cycle times, long life, etc. In addition to lead-acid battery, 3C3 HD series UPS is also compatible to lithium battery, flywheel, super capacitor, and other kinds of storage.

Intelligent online dummy load test

3C3 HD series UPS has the intelligent dummy load test function, which allows UPS to adjust the voltage difference between the inverter output and the bypass mains dynamically and intelligently without real external load, so that the inverter output current flows back to the grid input through the internal static bypass, achieving the purpose of equipment load test with minimum loss, and saving users a lot of rental load and test electricity costs.

- Intelligent energy feedback without connecting real external loads
- Full load test, but the overall energy loss only accounts for 3-5% of the total power
- This function can verify the internal components of UPS, load carrying capacity, cable connection and other UPS states are in perfect state before being put into use

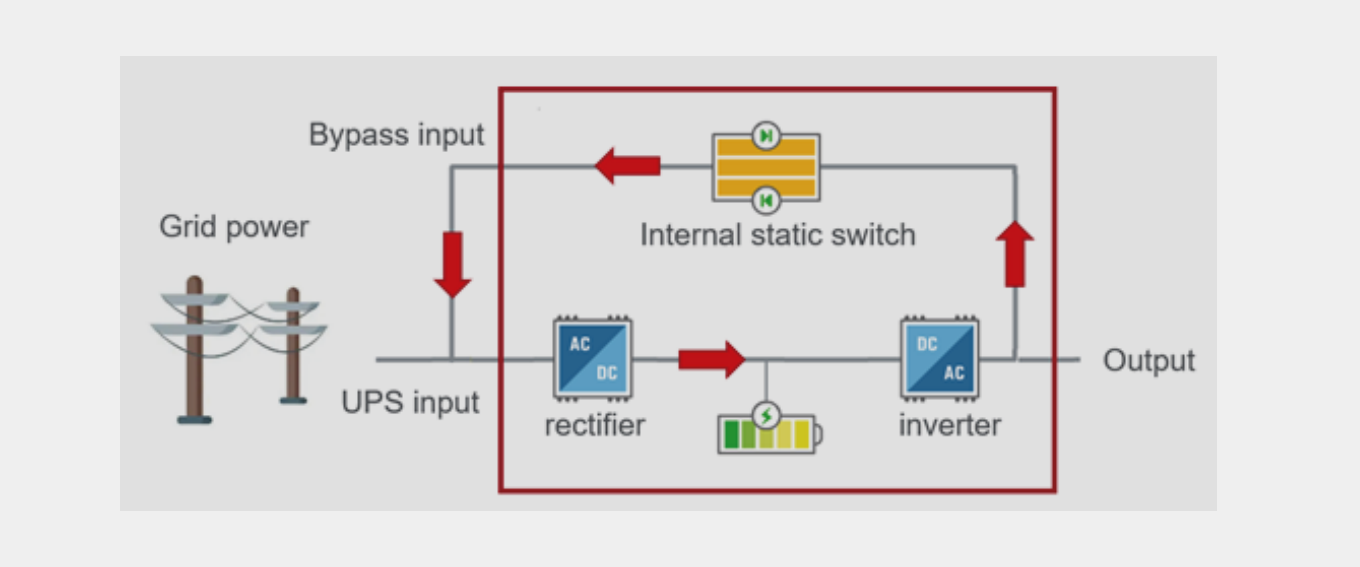

More convenient operation and maintenance management

The 3C3 HD series UPS adopts a full-color 7 " touch screen with LED status indicator, which is convenient for user to view the UPS status, operating and maintenance.

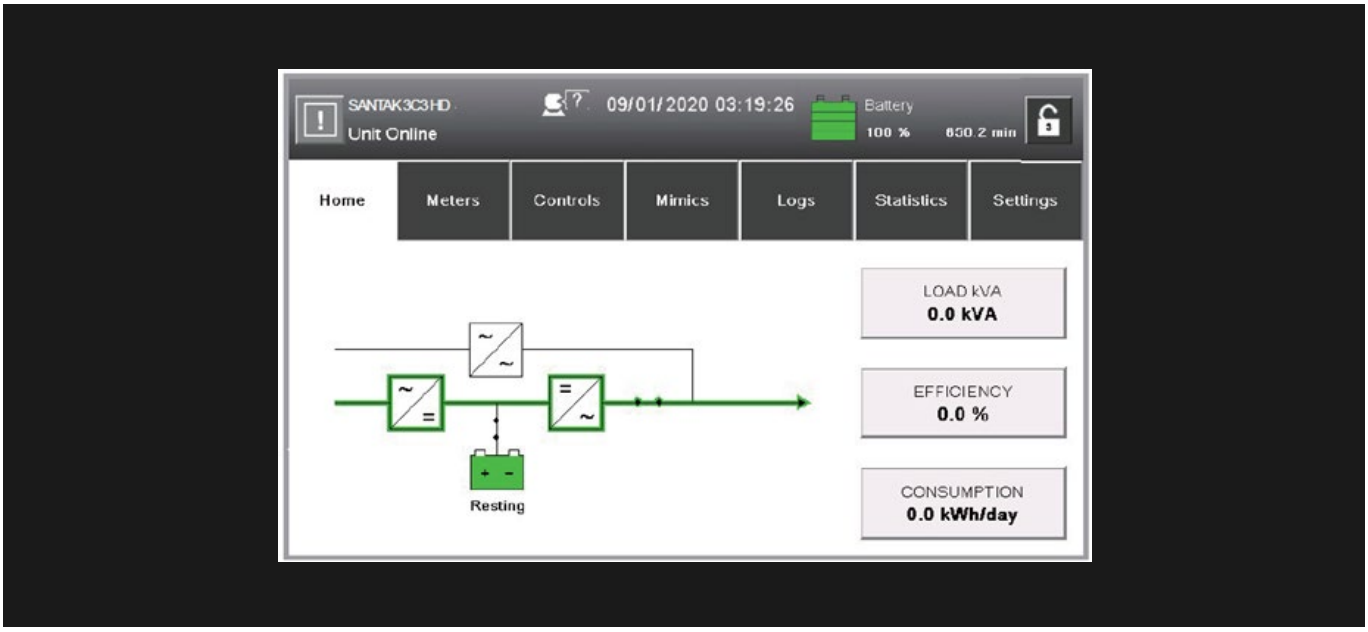

3C3 HD 300-600K Technical Data

Model		3C3 HD-300K	3C3 HD-400K	3C3 HD-500K	3C3 HD-600K
Power rating		**300kVA/300kW**	**400KVA/400KW**	**500KVA/500KW**	**600KVA/600KW**
Input	Wiring	Three phase+Neutral+Ground			
	Frequency	50/60 Hz			
	Frequency range	40 ~ 72 Hz			
	Power factor	≥ 0.99			
	Input voltage range	240 ~ 478 Vac / 138 ~ 276 Vac			
	Bypass voltage range	340 ~ 438Vac / 196 ~ 253 Vac			
	THDI	< 3% @ full linear load			
Output	Voltage	230/400 Vac (220/380, 240/415 optional)			
	Power factor	1			
	Freqency	50/60 Hz			
	THDV	< 1% @ full linear load			
	Over load	10 mins @ 111 ~ 125%, 1 min @ 126 ~ 150%			
	Parallel	4 units			
Efficiency	Double conversion mode	Up to 97%			
	ESS mode	Up to 99%			
Battery	Battery type	VRLA, NiCad, Lithium battery			
	Battery voltage	480 V (40 pcs) ~690 V (50 pcs), default 480 V			
	Charge current (max)	200 A	280 A	320 A	400 A
Environment	Ambient temperature	0-40°C			
	Storage temperature	–15 ~ +55°C			
	Ambient humidity	5 ~ 95%			
	Altitude	No derating < 1000 m			
Dimension	W x D x H	1100 x 1000 x 2000 mm			
Weight	Net weight	600 kg	650 kg	700 kg	820 kg
	Gross weight	700 kg	770 kg	820 kg	940 kg
Standard	Safty	IEC/62040			

SANTAK ELECTRONIC (SHENZHEN) CO., LTD.

Shenzhen, P.R. China
Address: No. 8 Baoshi Road, Baoan District, Shenzhen, 518101

Tel: 0086 755 27572666
Fax: 0086 755 27572730 (27572480)
Email: santakexport@santak.com

Website: www.santak.com

September. 2026